Appendix A

BC RESPONSE TO UPDATED TA AND UPDATED FTP

Directorate for Planning Growth & Sustainability
Buckinghamshire Council,
Walton Street Offices,
Walton Street,
Aylesbury
HP20 1UA

highwaysdm@buckinghamshire.gov.uk
01296 382416
www.buckinghamshire.gov.uk

Directorate For Planning, Growth And Sustainability
The Gateway
Gatehouse Road
Aylesbury
HP19 8FF

Date: 29th July 2020
Your ref: 15/00314/AOP

Sent to: devcontrol.av@buckinghamshire.gov.uk

Dear Sirs,

Re: South West Milton Keynes, Updated Transport Assessment
Location: Land South Of The A421 West Of Far Bletchley North Of The East West Rail Link And East Of Whaddon Road Newton Longville
Outline planning application with all matters reserved except for access for a mixed-use sustainable urban extension on land to the south west of Milton Keynes to provide up to 1,855 mixed tenure dwellings; an employment area (B1); a neighbourhood centre including retail (A1/A2/A3/A4/A5), community (D1/D2) and residential (C3) uses; a primary and a secondary school; a grid road reserve; multi-functional green space; a sustainable drainage system; and associated access, drainage and public transport infrastructure.

Thank you for your letter dated the 8th July 2020 in which you requested comment for the above application.

A full review of the Transport Assessment and Travel Plan has been performed, with additional data requested from the applicant consultants WSP including traffic flow and queue survey information that has allowed our initial comments to be finalised.

The table on the following pages compiles all comments raised to date for the application. These are in the process of being reviewed by the applicant consultants. Once we have received verification of our requests we will be able to provide a full comprehensive response to the application.

Directorate for Planning Growth & Sustainability
Buckinghamshire Council,
Walton Street Offices,
Walton Street,
Aylesbury
HP20 1UA

highwaysdm@buckinghamshire.gov.uk
01296 382416
www.buckinghamshire.gov.uk

Para. No.	Item	BC Comment	Sent to WSP
2.2.2	AYLESBURY VALE DISTRICT LOCAL PLAN 2001-2011 (2004) Section 4 of the AVDLP included general transport policies that applied across the District. However, the majority of those policies were not saved due to similar guidance being found within the national policy prevalent at the time. There are no saved transport policies relevant to the Proposed Development.	The previous TA listed three saved polices • GP.24 – Car parking. Now covered by BC Standards • GP.25 - Re-opening of Rail Routes Now covered by East West Rail with no impact on rail route. • RA.35 Safeguarded Road Corridor at Newton Longville Brickworks (Newton Leys) - will also seek to ensure that the opportunity for construction of a link between the proposed development in Milton Keynes and the Buckingham Road (A421) is not prejudiced by development This does not seem to be covered elsewhere.	16.07.2020
3.4.1	Using a centre point within the Site itself for the isochrone map would show inaccurate walk times due to the lack of an existing footway network within the Site.	The internal site layout is known, can an approximation not be provided? The walk distance will not extend as far into Milton Keynes as shown.	16.07.2020
3.5.5	Using a centre point within the Site itself for the isochrone map would show inaccurate cycle times due to the lack of an cycleway network within the Site.	The internal site layout is known, can an approximation not be provided? The cycle distance will not extend as far into Milton Keynes as shown.	16.07.2020
3.6.2	The nearest bus stops that are served by a regular bus service are on Chepstow Drive in Far Bletchley to the east of the Site.	These will be over 500 m considering internal road layout, beyond the reasonable walking distance, not explicitly detailed in the TA.	16.07.2020

Para. No.	Item	BC Comment	Sent to WSP
3.8.2	Access to local amenities has been considered by examining the number of services and facilities available within a reasonable walking and cycling distance of the Site. The distances that are typically considered acceptable by these modes of travel are as follows: Walking - up to 2km (equivalent to a 25-minute walk); and Cycling - up to 5km (equivalent to a 20-minute cycle).	Please confirm what these distances are based upon.	16.07.2020
3.8.3	The range of amenities and facilities available are shown in Figure 3.8 and Table 3.5. Figure 3.8 is also reproduced in Appendix I.	The distance is taking from the site access point. As detailed above this will be longer considering the internal site layout. Can an approximation not be made from the centre of the site, this may result in some amenities being outside acceptable distances.	16.07.2020
3.9.4	Figure 3.9 shows the collisions that occurred within the Buckinghamshire study area between 2014 and 2019.	Can you conform the study area for the collision review, especially when compared to the previous TA? Whilst the map area looks like the previous TA, all the 'outer' collisions from the 2016 revised TA (which included the surrounding Villages) are not present in the latest TA.	25.06.2020
3.9.5	Figure 3.10 shows the collisions classified by road condition.	This details review of carriageway conditions. Did you do any analysis of lighting (day / night) conditions?	25.06.2020
3.98	When reviewing the casualty data for the collisions in Buckinghamshire, there was only one pedestrian casualty and three cyclist casualties.	Details pedestrian and cyclist collisions. Whilst these are few, I cannot see a description on where these occurred on the network? Can you confirm where these did occur?	25.06.2020
3.9.13 / 3.9.14	Figure 3.12 shows collisions at A421/Little Horwood Road junction and the A421/Warren Road junction. There were four collisions at the junction between A421 and Little Horwood Road (Junction 9). One of these was serious and three were slight. The details of the collisions were as follows: • A side on impact due to overtaking when the car in front was making a right turn off A421; and • Two side on collisions due to failure to look when exiting junction.	The image in Figure 3.12 indicates 3 serious and 1 slight. Can you confirm which is correct? The text or the image, and what the final collision was of the four?	25.06.2020

Para. No.	Item	BC Comment	Sent to WSP
4.2.11	The design of the Proposed Development and its location in close proximity to the Milton Keynes Redway network, will encourage walking and cycling as an alternative sustainable method of travel to the private car.	Walking is not that viable. Paragraph 3.11.3, the facilities and amenities surrounding the site are largely beyond a reasonable walking and cycling distance. For those facilities and amenities not on site, are walking and cycling a consideration beyond the site?	16.07.2020
4.3.3	A connection with the existing Redway on the northern side of A421 Standing Way as well as other recreational routes, and via the existing pedestrian / cycle route running along the line of the old Buckingham Road route south of the current A421 Standing Way	I have not seen any discussion about how the new left-in only access will interact with the old Buckingham Road alignment, i.e. what measures to ensure safe crossing movements for NMU, with still potential high vehicle speeds (relative) on exiting the bend of the new access. On review of initial boundary this section of old Buckingham Road falls within MKC and presumably they maintain the route? Have any discussions been held about this potential crossing location and subsequent impacts?	22.06.2020
4.3.5	At this stage, the potential viability for extending either the 8/300 service would be subject to a further review prior to commencing the tendering process for the new service.	Either option is viable - What are MK thoughts on this; the service will be run and managed through their area?	16.07.2020
4.3.6	It is currently anticipated that the preferred option would be to start a completely new high frequency service between the Site, CMK, the rail station and key social infrastructure. The target would be to provide a journey time between the Site and CMK of circa 20 minutes, although this would be subject to further discussion and agreement with MKC, BC and the preferred operator.	Either option is viable - What are MK thoughts on this; the service will be run and managed through their area?	16.07.2020
4.3.8	The proposed bus service between the Site and Central Milton Keynes would commence no later than the occupation of the 100th dwelling, although the exact timing will be dependent upon the overall phased 'build out' period.	Would like a second commencement statement. 100th dwelling or 12 months from first occupation.	16.07.2020
4.3.11	Within the Site the Service will run on the principal development access roads designed to allow a dedicated route for bus services with priority at key junctions.	How are buses going to be provided priority, what measures, specifically at the access junction in the AM peak?	16.07.2020
4.3.11	Each stop would include raised boarding platforms (220mm high).	All buses should allow disabled access with ability to lower to/from normal upstand kerbs, without the need for raised kerbs. Please confirm that any bus used for the route will have this ability.	16.07.2020

Para. No.	Item	BC Comment	Sent to WSP
4.3.20	These revisions were shown on Drawing D014E (also in Appendix M for information). Revision E would be taken forwards to detailed design if required by BC.	Yes	16.07.2020
4.3.25	An 'x-distance' of the full 9m standard can be accommodated if required during detailed design.	Yes	16.07.2020
4.3.26	A421 Left-in Interaction with OBR and pedestrian / cycle route crossing. What has been considered, impact on operation of junction and user safety?	I have not seen any discussion about how the new left-in only access will interact with the old Buckingham Road alignment, i.e. what measures to ensure safe crossing movements for NMU, with still potential high vehicle speeds (relative) on exiting the bend of the new access. On review of initial boundary this section of old Buckingham Road falls within MKC and presumably they maintain the route? Have any discussions been held about this potential crossing location and subsequent impacts?	22.06.2020
4.3.29	**Buckingham Road RB** Revision D would be taken forwards to detailed design if required by BC.	Yes	16.07.2020
4.3.42.	A FTP is provided as a separate document. Following receipt of permission for the first reserved matters a Travel Plan Co-ordinator will be appointed who will be the main point of contact for all travel planning matters.	The targets proposed are challenging and without seeing any commitment to action it is hard to make assumptions about effectiveness. As a general 'direction of travel' framework this includes mention of most of the necessary factors. Moving forward this site will need careful scrutiny of the actual submitted Travel Plans because they will need to be better than average in order to reduce car use in this area. A firm commitment to expenditure would help provide reassurance.	16.07.2020
5.2.1	The trip generation for the extra care units is likely to be lower than an equivalent standard dwelling and as such the whole 1,855 dwellings has been assessed as standard dwelling.	What trip rates for care units have been identified?	16.07.2020

Para. No.	Item	BC Comment	Sent to WSP
5.3.1	EMPLOYMENT TRIPS Table 5.14 detail Trip Rates and Generation based on 895 jobs.	The agreed TN had 1360 jobs. The change in number of jobs has resulted in significant reduction of employment trips between the TN and new TA, e.g. 195 fewer arrivals in AM. On what basis are the new values derived as this makes a large difference to overall trip generation.	16.07.2020
5.4.1.	Education Trips It was agreed with BC and MKC that the assumptions around education trips would be the same as those agreed for the 2016 TA.	Has the MK request for school to work secondary trips by adding a proportion of additional trips taken from the gross primary escort trip generation been considered (NW email of 2nd April)?	16.07.2020
5.7.5.	At the request of MKC, rail based trips have been removed from the trip generation and applied across the potential modes that would be used to access rail based public transport. The resultant trip generation prior to taking account of travel planning is shown in Table 5.30	The values in this vary significantly for some modes, presumably in the main due to the change in employment. In the AM total movements are 134 less compared to the agreed TN.	16.07.2020
6.3.9	RESIDENTIAL TRIP DISTRIBUTION The analysis identified that the vast majority of trips remained within Milton Keynes (75%) with other key destinations including Aylesbury (1%), Newton Longville and environs (1%), Buckingham (1%), Luton (1%), Northampton (1%) and Leighton Buzzard (1%). A breakdown of the distribution and assignment is provided in Appendix S.	Email dated 17th April provided an updated spreadsheet with potential alternative routes for residential distribution. Very few of the alternatives were used and Watford 09 still seems to have been omitted from the list.	16.07.2020
6.3.11.	EMPLOYMENT TRIP DISTRIBUTION The analysis identified that the vast majority of trips originated from within Milton Keynes (63%) with other key origins including the area around the Site (Newton Longville and environs) (3%), Old Stratford, Deanshanger and environs (2%), Winslow (2%), Buckingham (2%) and Leighton Buzzard (1%). A breakdown of the distribution and assignment is provided in Appendix S.	Email dated 17th April provided an updated spreadsheet with potential alternative routes for employment distribution. Very few of the alternatives were used and Watford 09 still seems to have been omitted from the list.	16.07.2020
6.3.15.	Traffic flow diagrams showing the final trip distribution for the employment and residential trips are provided in Appendix T.	There are no specific distribution flow diagrams in Appendix T, as percentage or of development traffic flow, without which cannot assess	16.07.2020

Para. No.	Item	BC Comment	Sent to WSP
		future year do something scenarios. The only percentage and development flow diagrams are from the previously submitted Trip Distribution note and have not been updated.	
6.9.1.	The ATC data covered a two-week period, and the turning counts and queue length surveys were carried out over three consecutive mid-week days. Analysis of the ATC data demonstrated that traffic conditions on the days the turning counts and queue length surveys were carried out were 'typical', i.e. no major incidents on the network were identified.	What analysis was done comparing the 3-day Demand and two week ATC, what were the results?	16.07.2020
6.9.3.	Modelled queue lengths were then compared to the average maximum queue length identified from the queue length surveys (measured across the three survey days) on each arm of each of the junctions to identify where the modelled junction differed from that identified from the observed data collected.	Email from JS on 15.07.20 confirmed that taken the average queue length measures across the modelled period. Therefore, not the maximum queue but instead the mean. The observed queues should be the average interval queues (start / end of each time segment), as detailed in TRL training manual extract provided. This potentially impacts on corrections applied to various models which may need to be reviewed and models altered.	16.07.2020

Para. No.	Item	BC Comment	Sent to WSP

QUEUE OUTPUTS

TRL

Spot queues measured at the END of each time segment

Average over many days = ARCADY/PICADY time segment outputs

time segment	Day 1	Day 2	Day 3	Day 4	Day 5	AVERAGE
08:05	1	5	3	0	0	1.8
08:10	3	0	3	5	3	2.8
08:15	2	4	2	7	2	3.4
08:20	5	10	8	1	6	6.0
08:25	2	0	19	3	0	4.8
08:30	9	6	25	13	5	11.6
08:35	6	10	15	8	2	8.2
08:40	11	12	9	9	6	9.4
08:45	7	2	7	11	5	6.4
08:50	2	2	5	0	2	2.2
08:55	5	1	9	1	1	3.4
09:00	4	1	5	5	0	3.0
AVERAGE	4.8	4.4	9.2	5.3	2.7	5.3
MAX	11	12	25	13	6	11.6

Longest queue (over all time segments) on the 'average' day = ARCADY/PICADY 'Max Queue' shown in Summary Results

16

The numbers shown in the table are fictitious queue survey measurements carried out over a number of days. On each day, the queue is measured at the END of each time segment. (In this example the time segments are five minutes in length, but 15-minute time segments are more usual.) As you might expect, the number of vehicles in the queue for each time segment follows broadly the same pattern on each day, but the exact numbers differ from day to day. The time segment outputs shown in ARCADY/PICADY represent what you'd get if you observed queues on an infinite number of days and averaged the observations. In this example a set of five days has been used to illustrate the principle. This shows that if you happened to only have a single day's observations, the queue for the 08:45 time segment could vary between 2 and 11, whereas the value averaged over several days is about 6.

Averaging over time segments (the row along the bottom labelled 'AVERAGE') does NOT correspond to any ARCADY/PICADY outputs.

The averages over days (the column at the right labelled 'AVERAGE') correspond to ARCADY/PICADY time segment outputs, as described above. The highest value in this column (11.6, from the 08:30 time segment) is used as the "Maximum Queue" output. Note that with this set of fictitious queue observations, the longest queue on Day 3 was greater (25) and on Day 5 was lower (6). This is a reflection of the day-to-day variability of queue lengths.

Para. No.	Item	BC Comment	Sent to WSP
6.9.3.	The observed queue length data collected was compared with the queueing shown on a typical day within the Google Traffic application to consider whether the observed queue data was indeed typical of conditions on the local highway network.	Was this performed during Covid-19 lockdown where reduced flows were / traffic during this time, therefore was this included in the 'typical queues'?	16.07.2020
6.10.1.	To ensure the junction capacity assessments replicate existing traffic conditions in the baseline year (2020) the modelled results were compared to average maximum queue length data collected at the same time as the turning counts.	If using queues to calibrate this should be against the average interval queues as opposed to whole modelled mean queues, see 6.9.3 above.	16.07.2020
6.10	Model calibration and validation	Due to inconsistencies in determining average queues the validity of observed vs queues and subsequent calibration cannot be substantiated until clarification and determination of interval queues are considered.	16.07.2020
7.2.2.	**BUCKINGHAM ROAD ACCESS** The results of the analysis are presented in Table 7.1, with full model output contained in Appendix W. 2033 Do Something 1 AM Peak 2033 Do Something 1 PM Peak 2033 Do Something 2 AM Peak 2033 Do Something 2 PM Peak 2033 Do Something 3 AM Peak 2033 Do Something 3 PM Peak	1. There is a discrepancy between 2033 Do Something 1 AM Peak Traffic Diagram and the respective flow in the ARCADY Model. Arm B, Arm C and Arm D match the traffic diagram. While Arm A has a total value of 546 but looking at the Traffic Diagram this should b 425? As show on the images below. 2. There is a discrepancy between 2033 Do Something 1 PM Peak Traffic Diagram and the respective flow in the ARCADY Model. Arm B, Arm C and Arm D match the traffic diagram. While Arm A has a total value of 689 but looking at the Traffic Diagram this should be 782? 3. There is a discrepancy between 2033 Do Something 2 AM Peak Traffic Diagram and the respective flow in the ARCADY Model. Arm B, Arm C and Arm D match the traffic diagram. While Arm A has a total value of 537 but looking at the Traffic Diagram this should be 415? 4. There is a discrepancy 2033 Do Something 2 PM Peak Diagram and the respective flow in the ARCADY Model. Arm B, Arm C and Arm D match the traffic diagram. While Arm A has a	16.07.2020

Para. No.	Item	BC Comment	Sent to WSP
	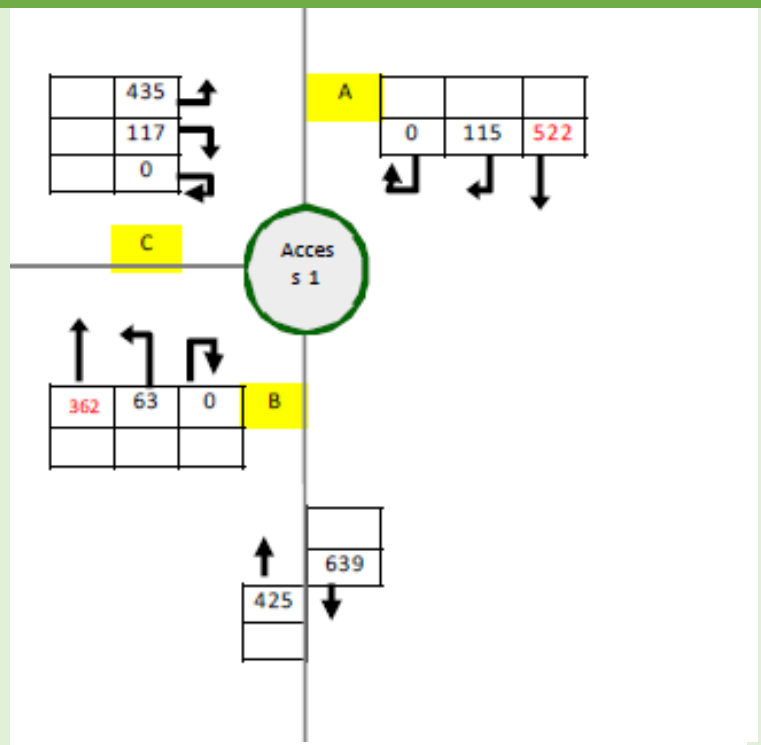 **Demand overview (Traffic)** Arm | Linked arm | Profile type | Use O-D data | Average Demand (Veh/hr) | Scaling Factor (%) A | | ONE HOUR | ✓ | 546 | 100.000 B | | ONE HOUR | ✓ | 123 | 100.000 C | | ONE HOUR | ✓ | 429 | 100.000 D | | ONE HOUR | ✓ | 637 | 100.000 **Origin-Destination Data** Demand (Veh/hr) From | To: A | B | C | D A | 0 | 13 | 49 | 484 B | 19 | 0 | 0 | 104 C | 98 | 0 | 0 | 331 D | 522 | 29 | 86 | 0	total value of 666 but looking at the Traffic Diagram this should be 759? 5. There is a discrepancy 2033 Do Something 3 AM Peak Diagram and the respective flow in the ARCADY Model. Arm B, Arm C and Arm D match the traffic diagram. While Arm A has a total value of 575 but looking at the Traffic Diagram this should be 454? 6. There is a discrepancy 2033 Do Something 3 PM Peak Diagram and the respective flow in the ARCADY Model. Arm B, Arm C and Arm D match the traffic diagram. While Arm A has a total value of 737 but looking at the Traffic Diagram this should be 830? This will impact on the results and summary of Table 7.1.	

Para. No.	Item	BC Comment	Sent to WSP
7.2.4	**WHADDON ROAD ACCESS** Some inconsistencies in the minor road lane widths. In the drawing provided different lane widths were noted compared to the PICADY input data. Lane 1 – 5 m Lane 2 – 5 m	Lane 1 – 4.1 m Lane 2 – 4.6 m Not expected to alter the results to a point where this will change performance levels.	16.07.2020
7.3.2.	**Junction 3 Bletchley Road/Stoke Road/Drayton Road/Whaddon Road** Some inconsistencies with measurements performed as part of BC site visit and amended PICADY file for the junction.	**Major Road Width** Measured as 6.0 m as part of BCC site visit. **Major Road A and C, Blocking** Both Am A and Arm C do not show as major road right-turners as not blocking. This is not the case and both arms '*Blocks*' should be selected with a PCU value of 0. **Visibility for Right-turn** Visibility for A - D, measured as 59 m as part of site visit Visibility for C - B, measured as 79.3 m as part of site visit **Arm B, lane width** Should be 3.4 m (first measurement of 6.1 m was not reduced to 5 m before taking the average). **Arm D, width measurements** Variation from actual measurements performed as part of a BCC site visit. Should be: Width at 5 m - 6.6 m Width at 10 m - 4.1 m **Arm B, visibilities** Variation from actual measurements performed as part of a BCC site visit. Should be: Visibility to the left: 16 m Visibility to the right: 41 m	16.06.2020

Para. No.	Item	BC Comment	Sent to WSP
7.3.2.	**Junction 3 Bletchley Road/Stoke Road/Drayton Road/Whaddon Road** In Appendix W the pdf does not show all the inputs / outputs for some of the 2033 scenarios.	Will need full document to complete review.	16.07.2020
7.3.6.	**Junction 3 Bletchley Road/Stoke Road/Drayton Road/Whaddon Road** As a result of the increase in delay at the junction in the Do Something scenarios, mitigation should be considered. The 2016 TA included a mini-roundabout improvement, although this was discarded by BC who preferred to secure a contribution through a s106 planning obligation towards appropriate traffic calming measures through Newton Longville.	This will remain the same due to concerns over practicality of introducing a four-arm mini-roundabout and maintaining suitable visibility.	16.07.2020
7.3.8	**Junction 4 Whaddon Road/Westbrook End Priority Junction** Some inconsistencies noted regarding the geometries detailed in Appendix V.	**Minor Road Type** Currently modelled as 1 lane plus flare. It is not possible for two vehicles to queue side by side at the give way line. This is highlighted by warning provided by the model. <u>Should be modelled as one lane with a measurement of 3.4 m.</u> Not expected to alter the results to a point where this will change performance levels	16.06.2020
7.3.8	**Junction 4 Whaddon Road/Westbrook End Priority Junction** The Whaddon Road/Westbrook End priority junction has been assessed using Junctions 9 (PICADY). The layout and geometry of this junction is shown in **Figure 7.4** and the capacity assessment results for the AM and PM peaks are provided in **Table 7.4.**	For 2033 Do Something 3 AM and PM the Vehicle Mix do not match the traffic flow diagram. Not expected to alter the results to a point where this will change performance levels	16.07.2020
7.3.10	**Junction 4 Whaddon Road/Westbrook End Priority Junction** The impacts of the Proposed Development are not considered to be significant at this junction and mitigation is therefore not necessary as the junction can accommodate traffic associated with the Proposed Development.	Agreed	16.07.2020

Para. No.	Item	BC Comment	Sent to WSP
7.3.15. **7.3.16.**	**Junction 7 Whaddon Crossroads** As a result of the negligible increase in queueing and delay at the junction in the Do Something scenarios assessed within this TA, mitigation is not considered necessary at this junction to ensure that there is no severe residual cumulative impact of development. The analysis within the 2016 TA suggested improvements to kerb entry widths to provide a *nil detriment* solution to mitigate the impact of the Proposed Development. That previously agreed mitigation has been assessed in Section 8 of this TA. Should BC or MKC establish that the previously agreed mitigation at this junction is still an appropriate and justified approach to address the impact of the Proposed Development, the Applicants would be willing to agree a suitable planning obligation to secure its delivery.	A421 East queues are predicted to double (18 to 36) from the 2033 Do Nothing t the 2033 Do Something 1 and 3 scenarios, with the RFC predicted to exceed RFC of 1.0 (2033 Base just under at 0.97 RFC). The remaining arms will see increases but not significant. An obligation for this junction is likely to be sought in line with the mitigation set out in Section 8.	16.07.2020
7.3.17.	**Junction 8 Warren Road** The priority junction of A421/Warren Road has been assessed using Junctions 9 (PICADY). The layout and geometry of this junction is shown in **Figure 7.6** and the capacity assessment results for the AM and PM peaks are provided in **Table 7.6.**	Some inconsistencies noted regarding the geometries detailed in Appendix V. **Minor Arm Geometry** Modelled as one lane, but looking at measurements, CAD Plan and Google images more than enough space for vehicles to queue side by side at the give way line, potentially two vehicle queue from the give way line. Likely to improve capacity results.	16.06.2020
7.3.20. **7.3.21.**	**Junction 8 Warren Road** As a result of the negligible increase in queueing and delay at the junction in the Do Something scenarios assessed within this TA, mitigation is not considered necessary at this junction to ensure that there is no severe residual cumulative impact of development. The analysis within the 2016 TA suggested conversion of the junction to incorporate traffic signals and provide a *nil detriment* solution to	An obligation for this junction is likely to be sought in line with the mitigation set out in Section 8 / contribution to A421 improvements.	16.07.2020

Para. No.	Item	BC Comment	Sent to WSP
	mitigate the impact of the Proposed Development. That previously agreed mitigation has been assessed in Section 8 of this TA. Should BC or MKC establish that the previously agreed mitigation at this junction is still an appropriate and justified approach to address the impact of the Proposed Development, the Applicants would be willing to agree a suitable planning obligation to secure its delivery.		
7.3.24	**Junction 9 A421/Shucklow Hill/Little Horwood Road** It should be noted that where results of >3 have been reported this is because the model is unable to display a result for RFC given that the arm is operating considerably above capacity (RFC of 1).	RFC of 9999999.99 represents that in certain time segments capacity is predicted to reach zero. Does not change outcome of the results. Arm B for the 2033 Do Nothing does not represent the worst queuing levels, which are subsequently reported for the remaining 2033 scenarios. Will not change summary of the response.	16.07.2020
7.3.28	**Junction 9 A421/Shucklow Hill/Little Horwood Road** The analysis within the 2016 TA suggested conversion of the junction to incorporate traffic signals and provide a *nil detriment* solution to mitigate the impact of the Proposed Development. That previously agreed mitigation has been assessed in Section 8 of this TA. Should BC or MKC establish that the previously agreed mitigation at this junction is still an appropriate and justified approach to address the impact of the Proposed Development, the Applicants would be willing to agree a suitable planning obligation to secure its delivery.	An obligation for this junction is likely to be sought in line with the mitigation set out in Section 8 / contribution to A421 improvements.	16.07.2020
7.3.33.	**Junction 10 A421/Nash Road/Winslow Road** The analysis within the 2016 TA improvements to kerb entry widths to provide a *nil detriment* solution to mitigate the impact of the Proposed Development. That previously agreed mitigation has been assessed in Section 8 of this TA. Should BC or MKC establish that the previously agreed mitigation at this junction is still an appropriate and justified	An obligation for this junction is likely to be sought in line with the mitigation set out in Section 8 / contribution to A421 improvements.	16.07.2020

Para. No.	Item	BC Comment	Sent to WSP
	approach to address the impact of the Proposed Development, the Applicants would be willing to agree a suitable planning obligation to secure its delivery.		
7.3.34	**Junction 11: Stock Lane, Coddimoor Lane, Shenley Road** The junction at Whaddon village is a priority junction that has been assessed using Junctions 9 (PICADY). The layout and geometry of this junction is shown in **Figure 7.9**	**Minor Road Visibility to the left** Value of 51.2 provided, but this seems to pass through part of the hedge boundary. Review via aerial images indicates a value of approx. 30 m. Very unlikely to alter results or overall outcome.	16.06.2020
7.3.35.	**Junction 11: Stock Lane, Coddimoor Lane, Shenley Road** The results presented in **Table 7.9** show that the junction operates with satisfactory performance (RFC below 0.85) in all scenarios assessed. No development traffic is routed via this junction within this TA and therefore there is no impact as a result of the Proposed Development. Mitigation is therefore not necessary.	Agreed	16.07.2020
7.3.51.	**Junction 6 Bottle Dump Roundabout** Some inconsistencies noted with the input data for the ARCADY file.	**Arm B, Lane level 1 storage** Value of 5 PCU provided for lane level one storage, which equates to 28.75 m (5 x 5.75 m). Looking on Google 28.75 m extends back to a point where lane width is approx. 5 m and may not support vehicles queuing side by side. <u>On review a value of 4 PCU may be more appropriate.</u> **Entry lane geometry** Radius, ICD and conflict angle are not correct for lane 1. Looking at google Streetview the radius should be greater than 3 m, the ICD will be similar to lane 2 and conflict will not be zero. **Lane allowed movements** Model shows the right turn from Whaddon Road to Standing Way (E) is allowed from lane 1. Also shows that Lane 2 allows left-turn movement to Standing Way (W). On review of the traffic flow spreadsheets very little or none of these movements occur from the lanes.	16.06.2020

Para. No.	Item	BC Comment	Sent to WSP
		The right-turn should be removed from Lane 1 and the left turn removed from Lane 2.	
7.3.57.	**Junction 6 Bottle Dump Roundabout** The analysis within the 2016 TA improvements to kerb entry widths to provide a *nil detriment* solution to mitigate the impact of the Proposed Development. That previously agreed mitigation has been assessed in Section 8 of this TA. Should BC or MKC establish that the previously agreed mitigation at this junction is still an appropriate and justified approach to address the impact of the Proposed Development, the Applicants would be willing to agree a suitable planning obligation to secure its delivery.	An obligation for this junction is likely to be sought in line with the mitigation set out in Section 8 / contribution to A421 improvements.	16.07.2020
7.9.1	**Impacts Of Construction Traffic** Construction traffic would be routed to and from the Site on the basis that all construction traffic would use the Whaddon Road access. This is the preferred strategy for segregating residential and construction traffic based upon the phasing of the Site; Heavy Goods Vehicles are assumed to utilise A421 to and from the Site as the closest Principal Road to the Site. Based upon the location of Site, to the west of Milton Keynes and the SRN (A5 and M1), 75% 75% of HGVs were assumed to arrive from/depart to the east and 25% to/from the west; and	There will need to be a requirement to ensure no HGV construction traffic is routed through Newton Longville.	16.07.2020
7.10.3.	SUMMARY **Table 7.31** provides a summary of the highway modelling and where the identified impact would require further consideration. Where mitigation is considered necessary, or has previously been agreed with BC/MKC, this is identified in the Table below and considered further in Section 8 of this TA.	The outstanding issues relating to the below will need to discussed with potential amendments to the Models, this may alter the summary. • Employment numbers • Updated trip distribution and development traffic • Queue analysis and model calibration • Modelling queries •	16.07.2020

Para. No.	Item	BC Comment	Sent to WSP
	8 - MITIGATION PACKAGE		
8.3.8.	**Junction 3 Bletchley Road/Stoke Road/Drayton Road/Whaddon Road** However, as previously agreed, it is proposed that a contribution towards traffic calming through Newton Longville is provided, in place of the mitigation scheme. This would be secured as a S106 planning obligation.	The same request for S106 planning obligation for a traffic calming scheme will be required. There are still concerns about overall viability of introducing a four arm mini-roundabout.	16.07.2020
8.3.12	**Junction 7 Whaddon Crossroads** Should BC or MKC establish that the previously agreed mitigation at this junction is still an appropriate and justified approach to address the impact of the Proposed Development, the Applicants would be willing to agree a suitable planning obligation to secure its delivery.	It is likely that a suitable planning obligation would be required. The queues and delay for A421 are relatively high and for potential future sustainable mode routes along the A421 have RFC below 1.0 would be preferable.	16.07.2020
8.3.14 .	**Junction 8 and Junction 9 Warren Road/A421 and A421/Shucklow Hill/Little Horwood Road** Notwithstanding, a mitigation scheme to provide traffic signal controlled junctions at both priority junctions was previously agreed to provide suitable mitigation, with the cost of the improvements to be commuted as a S106 contribution towards a wider corridor improvement for A421 within Buckinghamshire. That previously agreed mitigation has been assessed as part of this TA. **Figure 8.4** provides the proposals for the junction	Some potential inconsistencies with some model data input: **Give-Way Lane Input Data, Junction: J3: Warren Road, Right Turn Storage (PCU)** This bay looks smaller than that for the other junctions but same storage value? **Lane Input Data, Junction: J1: Little Horwood, Lane Width (m)** J1:2/1 (Little Horwood Road) has a lane width of 5 m? Do not have scaled drawing but this is wider than the other lanes but visually appears the same. **Lane Input Data, Junction: J2: Shucklow Hill, Lane Width (m)** J2:2/1 (Shucklow Hill) has a lane width of 5 m? Do not have scaled drawing but this is wider than the other lanes but visually appears the same. **Lane Input Data, Junction: Junction: J3: Warren Road, Lane Width (m)** J3:5/1 (Warren Road)has a lane width of 5 m? Do not have scaled drawing but this is wider than the other lanes but visually appears the same.	

Para. No.	Item	BC Comment	Sent to WSP
8.3.16	**Junction 8 and Junction 9 Warren Road/A421 and A421/Shucklow Hill/Little Horwood Road** Should BC or MKC establish that the previously agreed mitigation at this junction is still an appropriate and justified approach to address the impact of the Proposed Development, the Applicants would be willing to agree a suitable planning obligation to secure its delivery.	It is likely that a suitable planning obligation would be required. As per previous agreement a contribution to wider A421 improvements is more likely than signalisation of the A421.	16.07.2020
8.3.18.	**Junction 10 A421/Nash Road/Winslow Road** Notwithstanding this, a mitigation scheme was previously agreed to provide widened entry lanes through kerb amendments was previously agreed to provide suitable mitigation.	The approach and entry wide change for the western arm of the A421 but it is not clear how this is achieved as no kerb line realignment is shown?	16.07.2020
8.3.20.	**Junction 10 A421/Nash Road/Winslow Road** Should BC or MKC establish that the previously agreed mitigation at this junction is still an appropriate and justified approach to address the impact of the Proposed Development, the Applicants would be willing to agree a suitable planning obligation to secure its delivery.	It is likely that a suitable planning obligation would be required. The queues and delay for A421 are relatively high and for potential future sustainable mode routes along the A421 have RFC below 1.0 would be preferable.	16.07.2020
8.3.39.	**Junction 6 Bottle Dump Roundabout** Some inconsistencies noted with the input data for the ARCADY file.	**Arm B, Lane level 1 storage** Value of 5 PCU provided for lane level one storage, which equates to 28.75 m (5 x 5.75 m). Looking on Google 28.75 m extends back to a point where lane width is approx. 5 m and may not support vehicles queuing side by side. <u>On review a value of 4 PCU may be more appropriate.</u> **Entry lane geometry** Radius, ICD and conflict angle are not correct for lane 1. Looking at google Streetview the radius should be greater than 3 m, the ICD will be similar to lane 2 and conflict will not be zero. **Lane allowed movements** Model shows the right turn from Whaddon Road to Standing Way (E) is allowed from lane 1. Also shows that Lane 2 allows left-turn movement to Standing Way (W). On review of the traffic flow spreadsheets very	16.07.2020

Para. No.	Item	BC Comment	Sent to WSP
		little or none of these movements occur from the lanes. The right-turn should be removed from Lane 1 and the left turn removed from Lane 2.	
8.3.42.	**Junction 6 Bottle Dump Roundabout** Should BC or MKC establish that the previously agreed mitigation at this junction is still an appropriate and justified approach to address the impact of the Proposed Development, the Applicants would be willing to agree a suitable planning obligation to secure its delivery.	The mitigation scheme does not look to resolve the worse arm of the junction (Arm A), which is due to uneven lane usage / queueing on MKC approach. I would imagine any mitigation would look to provide two-lane straight-ahead entry / exit for westbound on the A421. Was this considered / looked at, have MKC come back with any queries on this approach?	16.07.2020
8.5.2	It is proposed to reduce the speed limit on Whaddon Road in the vicinity of the Site access given the changing nature of the area upon completion of the Proposed Development. The reduction in speed limit should positively impact on the collision rate along the road and on the severity of injury.	Has this been accommodated in 278 agreement as part of the site access works?	16.07.2020

Directorate for Planning Growth & Sustainability
Buckinghamshire Council,
Walton Street Offices,
Walton Street,
Aylesbury
HP20 1UA

highwaysdm@buckinghamshire.gov.uk
01296 382416
www.buckinghamshire.gov.uk

We are also aware of a recent letter received from Whaddon Parish Council dated the 12th February 2020 (received 13th July 2020). In response to the queries raised we have the following comments.

The traffic surveys undertaken in January and February 2020 were performed at locations agreed between the Consultants acting on behalf of the South West Milton Keynes (SWMK) (Salden Chase) development and Buckinghamshire County officers.

The type and duration of the surveys varied from the previous data collection exercise and Transport Assessment submission. In this instance three-day manual classified counts (MCC) were performed at each arm of every junction included in the assessment area to provide a more indicative set of turning movements compared to the single day count performed for the previous submission in 2015. Additional automatic traffic counters (ATC) were performed over a two-week period upstream of each junction to ensure that the three-day MCC were representative of daily traffic demand conditions.

As part of the approval process a review of roadworks within BC was performed with a suitable gap in the BC planned road works in the area identified to allow data collection to be performed.

As noted in the letter Calverton Lane within Milton Keynes, but also the V4 Watling Street between Tilers Road and the Crownhill roundabout at H4 Dansteed Way was, and is still closed within Milton Keynes. The diversion route for the road closures are located much further north and not within Whaddon itself. It is also understood that the diversion is not signed from the A421, as such most motorists would have used the diversion route and would therefore still have travelled through Whaddon.

The extent of the SWMK assessment network is the junction of Coddimoor Lane/Stock Lane/Shenley Road, just to the south of the village of Whaddon itself. To avoid the closure of Calverton Lane the most likely alternative to or from the A421 would be via the Kingsmead area via Shenley Road. Any traffic routing through the Kingsmead development would turn into Shenley Road at that junction rather than continuing into Stock Lane. This would result in additional turning movements to the minor arm (Shenley Road) rather than a continuation on the main road and is much more likely to have greater impact on the capacity analysis at the junction once assessed. It should also be noted that the letter dated 12th February makes specific reference to Shenley Park development, on which the road closure may have had a greater impact compared to the Salden Chase development due to its closer proximity.

On review of the data between the previous 2015 data collection exercise and the more recent 2020 exercise it is apparent that the traffic demand has increased for most of the arms at the junctions of Coddimoor Lane/Stock Lane/Shenley Road and the Whaddon Crossroads roundabout. In the 2020 data collection the flows on each arm are on average 25% greater compared to the 2015 exercise through the two junctions. Only in the AM peak period was a decrease recorded over the five-year period for one arm at Whaddon Crossroads roundabout and one arm at the Coddimoor Lane/Stock Lane/Shenley Road junction.

These are significant increases in demand over a five year period and indicate that the higher level of data collection has provided robust values to allow sufficient analysis of the projected traffic impact the Salden Chase development will have on the surrounding network. Although we would not rule out requesting additional traffic surveys in the future through parts of the network if deemed necessary on full review and analysis of the available data and the potential impact.

If you have any queries regarding any of the above please do not hesitate to contact me.

Yours sincerely

James Bedingfeld
Highways Development Management
Planning Growth & Sustainability

Please note:
This advice is given at officer level only and is based on the facts and information you have supplied. It must be understood that the final decision on any planning application that may be submitted in the future rests with the Planning Authority.

Appendix B

PUBLIC TRANSPORT PLAN

Public

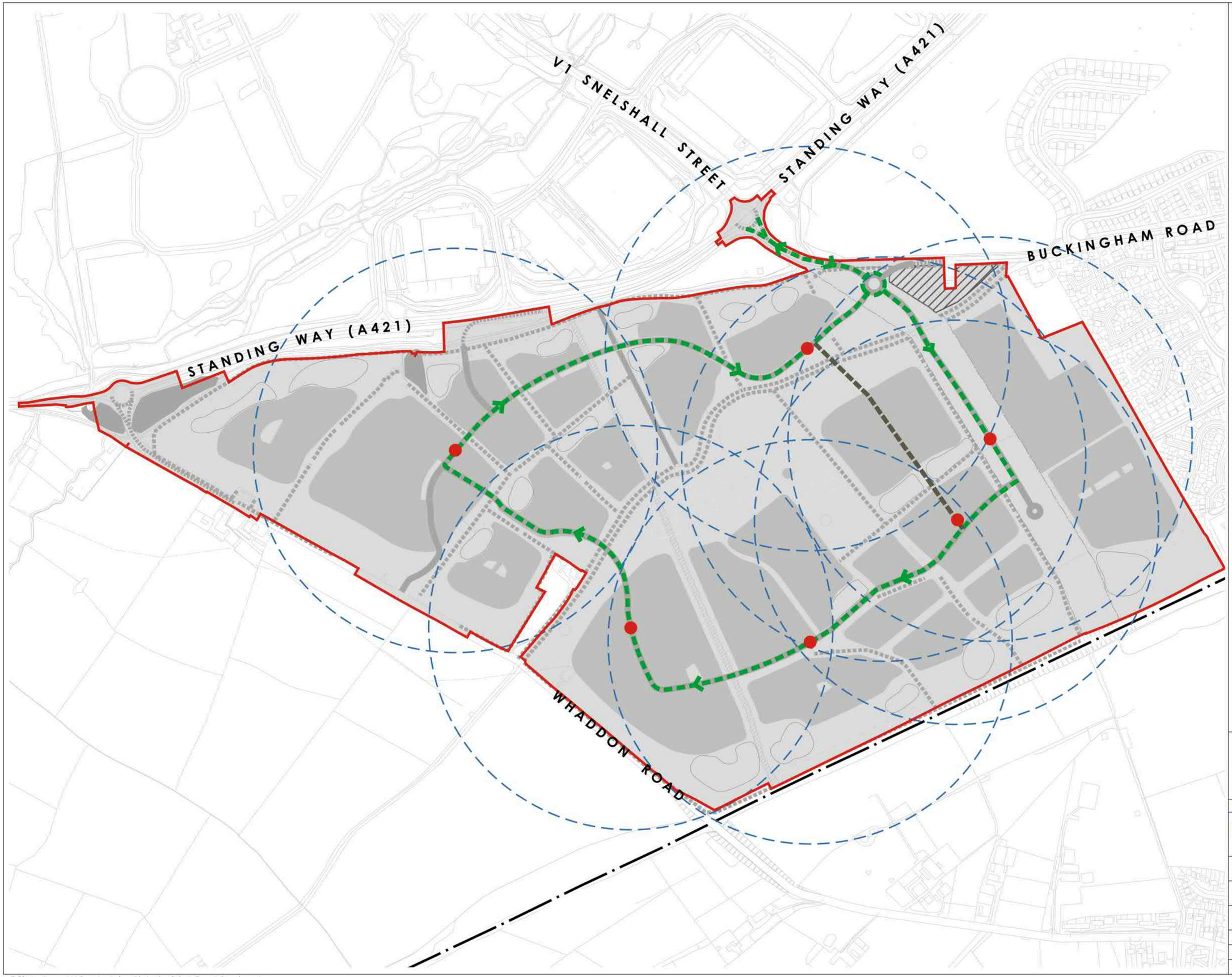

0 100 200 metres

N

Planning Application Boundary

Bus Route

Interim bus route along secondary street as part of Phase 1

Bus Stops

400m/5 min walk from bus stops

Rev	Date	By	Description
C	21.05.20	SG	Updated to DFPP Rev K
B	04.05.20	SG	Secondary school and drainage amended
A	16.04.20	JC	Project title update/ layout amendments to the south eastern development parcel

CSA environmental
Dixies Barns, High Street,
Ashwell, Hertfordshire SG7 5NT
t 01462 743647
e ashwell@csaenvironmental.co.uk
w csaenvironmental.co.uk

Project	Land at South West Milton Keynes		
Title	Public Transport Plan		
Client	Taylor Wimpey UK Ltd, William Davis Ltd, Hallam Land Management Ltd, Bellcross Homes and Connolly Homes		
Scale	1:5000 @ A2	Drawn	SM/SB
Date	March 2020	Checked	RR
Drawing No.	CSA/4857/117	Rev	C

© CSA Landscapes Ltd. Do not scale from this drawing. Refer to figured dimensions only.

Appendix C

COLLISION DATA

Public

Accidents between dates **01/06/2017** **and** **31/05/2020** (36) months

Selection: **Notes:**

Selected using Manual Selection

CONFIDENTIAL ROAD ACCIDENT INFORMATION: NOT TO BE TRANSMITTED TO THIRD PARTIES

Friday 02/06/2017 Time 1630 Slight at C46 MURSLEY ROAD LITTLE HORWOOD (LOC TKN FROM MAR REF)
E: 479592 N: 230456 Junction Detail: 0 Control
Fine without high winds Road surface Dry Daylight

PC2 TRAV SE TWDS STEWKLEY ENT RHB, C1 TRAV SAME DIR BGN OTK PC2 SAW C3 TRAV OPP DIR LHB, MVD IN STRUCK CYCLIST WITH N/SIDE WING MIRROR. C1 FTS

Road Type Single carriageway Vehicles 3 Casualties 1 Police Ref. 43170170236 Speed limit 60
Crossing: Control 0 Facilities 0 Local Authority: E07 Parish: 1569 Accident Type(s) OO

Causation

	Factor:	Participant:	Confidence:
1st:	Passing too close to cyclist, horse rider or pedestrian	Vehicle 1	Possible
2nd:			
3rd:			
4th:			
5th:			
6th:			

Vehicle Reference 1 Car Moving from W to SE Overtaking moving vehicle O/S
On main carriageway No skidding, jack-knifing or overturning
First point of impact Nearside Parts damaged: Age of Driver Sex of Driver Not traced Breath test Driver not contacted

Vehicle Reference 2 Pedal Cycle Moving from W to SE Going ahead right bend
On main carriageway No skidding, jack-knifing or overturning
First point of impact Offside Parts damaged: Age of Driver 15 Sex of Driver Male Breath test Not applicable

Casualty Reference: 1 Age: 15 Male Driver/rider Severity: Slight Injured by vehicle: 2

Ped. Location Ped. Movement Ped. Direction Ped. Injury School pupil: 0

Accidents between dates **01/06/2017** **and** **31/05/2020** (36) months

Selection: **Notes:**

Selected using Manual Selection

CONFIDENTIAL ROAD ACCIDENT INFORMATION: NOT TO BE TRANSMITTED TO THIRD PARTIES

Vehicle Reference 3 Car Moving from SE to W Going ahead left bend

On main carriageway No skidding, jack-knifing or overturning

First point of impact Did not impact Parts damaged: Age of Driver Sex of Driver Not traced Breath test Driver not contacted

Accidents between dates **01/06/2017** **and** **31/05/2020** (36) months

Selection: **Notes:**

Selected using Manual Selection

CONFIDENTIAL ROAD ACCIDENT INFORMATION: NOT TO BE TRANSMITTED TO THIRD PARTIES

Sunday 20/08/2017 Time 0330 Slight at UNC LITTLE HORWOOD ROAD APPRX 300M NW SHUCKLOW HILL
E: 478805 N: 231230 Junction Detail: 0 Control
Fine without high winds Road surface Dry Darkness: no street lighting
C1 TRAV NW TWDS GREAT HRWOOD, DRVR FAILED TO NEG LHB LEFT CWAY O/SIDE COLL ELECTRICITY POLE
Road Type Single carriageway Vehicles 1 Casualties 2 Police Ref. 43170266814 Speed limit 60
Crossing: Control 0 Facilities 0 Local Authority: E07 Parish: 1569 Accident Type(s) SG

Causation

	Factor:	Participant:	Confidence:
1st:	Loss of control	Vehicle 1	Very Likely
2nd:	Impaired by alcohol	Vehicle 1	Possible
3rd:			
4th:			
5th:			
6th:			

Vehicle Reference 1 Car Moving from S to N Going ahead left bend
On main carriageway Skidded
First point of impact Front Parts damaged: Age of Driver 20 Sex of Driver Male Breath test Negative
Casualty Reference: 1 Age: 20 Female Passenger Severity: Slight Injured by vehicle: 1
Ped. Location Ped. Movement Ped. Direction Ped. Injury School pupil: 0

Casualty Reference: 2 Age: 20 Male Driver/rider Severity: Slight Injured by vehicle: 1
Ped. Location Ped. Movement Ped. Direction Ped. Injury School pupil: 0

Accidents between dates **01/06/2017** **and** **31/05/2020** (36) months

Selection: **Notes:**

Selected using Manual Selection

CONFIDENTIAL ROAD ACCIDENT INFORMATION: NOT TO BE TRANSMITTED TO THIRD PARTIES

Thursday 23/11/2017 Time 1930 Slight at C17 WHADDON ROAD, MURSLEY
E: 481634 N: 229433 Junction Detail: 0 Control
Fine without high winds Road surface Dry Darkness: no street lighting
C1 TRAV TOO FAST INTO LHB. BRAKED HARD AND LOST CONTROL, LEFT RD AND INTO DITCH N/S
Road Type Single carriageway Vehicles 1 Casualties 1 Police Ref. 43170364905 Speed limit 60
Crossing: Control 0 Facilities 0 Local Authority: E07 Parish: 1572 Accident Type(s) SG

Causation

	Factor:	Participant:	Confidence:
1st:	Failed to look properly	Vehicle 1	Possible
2nd:	Poor turn or manoevre	Vehicle 1	Possible
3rd:	Sudden braking	Vehicle 1	Possible
4th:	Swerved	Vehicle 1	Possible
5th:			
6th:			

Vehicle Reference 1 Car Moving from S to N Going ahead left bend
On main carriageway Skidded
First point of impact Front Parts damaged: Age of Driver 22 Sex of Driver Male Breath test Negative
Casualty Reference: 1 Age: 22 Male Driver/rider Severity: Slight Injured by vehicle: 1
Ped. Location Ped. Movement Ped. Direction Ped. Injury School pupil: 0

Accidents between dates **01/06/2017** **and** **31/05/2020** (36) months
Selection: **Notes:**
Selected using Manual Selection

CONFIDENTIAL ROAD ACCIDENT INFORMATION: NOT TO BE TRANSMITTED TO THIRD PARTIES

Thursday 14/12/2017 Time 0840 Slight at B4033 GREAT HORWOOD ROAD GREAT HORWOOD AT RODDIMORE FARM
E: 476623 N: 229279 Junction Detail: 0 Control
Fine without high winds Road surface Frost/Ice Daylight
C1 TRAV N TWDS GREAT HORWOOD LOST CON RHB ICY RD LEFT CWAY N/SIDE ENT DITCH
Road Type Single carriageway Vehicles 1 Casualties 1 Police Ref. 43170383254 Speed limit 60
Crossing: Control 0 Facilities 0 Local Authority: E07 Parish: 1556 Accident Type(s) SG

Causation

	Factor:	Participant:	Confidence:
1st:	Slippery road (due to weather)	Vehicle 1	Very Likely
2nd:	Loss of control	Vehicle 1	Very Likely
3rd:			
4th:			
5th:			
6th:			

Vehicle Reference 1 Car Moving from SE to N Going ahead right bend
On main carriageway Skidded
First point of impact Nearside Parts damaged: Age of Driver 28 Sex of Driver Female Breath test Negative
Casualty Reference: 1 Age: 28 Female Driver/rider Severity: Slight Injured by vehicle: 1
Ped. Location Ped. Movement Ped. Direction Ped. Injury School pupil: 0

Accidents between dates **01/06/2017** **and** **31/05/2020** (36) months
Selection: **Notes:**
Selected using Manual Selection

CONFIDENTIAL ROAD ACCIDENT INFORMATION: NOT TO BE TRANSMITTED TO THIRD PARTIES

Friday 15/12/2017 Time 0915 Slight at C46 STATION ROAD MURSLEY SE SPRING GROVE FARM
E: 480985 N: 229031 Junction Detail: 0 Control
Fine without high winds Road surface Frost/Ice Daylight
C1 TRAV NW TWDS LITTLE MURSLEY LOST CON RHB ICY RD LEFT CWAY O/SIDE
Road Type Single carriageway Vehicles 1 Casualties 1 Police Ref. 43170383237 Speed limit 60
Crossing: Control 0 Facilities 0 Local Authority: E07 Parish: 1572 Accident Type(s) SG

Causation

	Factor:	Participant:	Confidence:
1st:	Slippery road (due to weather)	Vehicle 1	Very Likely
2nd:	Poor or defective road surface	Vehicle 1	Very Likely
3rd:			
4th:			
5th:			
6th:			

Vehicle Reference 1 Car Moving from E to N Going ahead right bend
On main carriageway No skidding, jack-knifing or overturning
First point of impact Nearside Parts damaged: Age of Driver 41 Sex of Driver Male Breath test Negative
Casualty Reference: 1 Age: 41 Male Driver/rider Severity: Slight Injured by vehicle: 1
Ped. Location Ped. Movement Ped. Direction Ped. Injury School pupil: 0

Accidents between dates **01/06/2017** **and** **31/05/2020** (36) months
Selection: **Notes:**
Selected using Manual Selection

CONFIDENTIAL ROAD ACCIDENT INFORMATION: NOT TO BE TRANSMITTED TO THIRD PARTIES

Tuesday 13/02/2018 Time 0120 Serious at B4032 SWANBOURNE ROAD MURSLEY J/W C17 MAIN STREET
E: 481944 N: 228254 Junction Detail: 3 Control 4
Fine without high winds Road surface Wet/Damp Darkness: street lights present and lit
C1 TRAV NE SWANBOURNE RD FAILED TO STOP AT JUNC CAME TO REST IN DITCH OPP JUNC
Road Type Single carriageway Vehicles 1 Casualties 1 Police Ref. 43180057579 Speed limit 60
Crossing: Control 0 Facilities 0 Local Authority: E07 Parish: 1572 Accident Type(s) SG

Causation

	Factor:	Participant:	Confidence:
1st:	Impaired by alcohol	Vehicle 1	Very Likely
2nd:			
3rd:			
4th:			
5th:			
6th:			

Vehicle Reference 1 Car Moving from S to NE Going ahead other
On main carriageway Skidded
First point of impact Front Parts damaged: Age of Driver 32 Sex of Driver Male Breath test Positive
Casualty Reference: 1 Age: 32 Male Driver/rider Severity: Serious Injured by vehicle: 1
Ped. Location Ped. Movement Ped. Direction Ped. Injury School pupil: 0

Accidents between dates **01/06/2017** **and** **31/05/2020** (36) months
Selection: **Notes:**
Selected using Manual Selection

CONFIDENTIAL ROAD ACCIDENT INFORMATION: NOT TO BE TRANSMITTED TO THIRD PARTIES

Wednesday 02/05/2018 Time 1152 Fatal at B4033 GREAT HORWOOD ROAD WINSLOW N BROOKSIDE FARM
E: 476750 N: 228691 Junction Detail: 0 Control
Fine without high winds Road surface Wet/Damp Daylight
C1 TRAV S TWDS WINSLOW WRONG SIDE CWAY COLL HEAD ON C2 TRAV OPP DIR TWDS GREAT HORWOOD. DRVR C1 RCVD FATAL INJURIES
Road Type Single carriageway Vehicles 2 Casualties 2 Police Ref. 43180133134 Speed limit 60
Crossing: Control 0 Facilities 0 Local Authority: E07 Parish: 1661 Accident Type(s) NN

Causation

	Factor:	Participant:	Confidence:
1st:			
2nd:			
3rd:			
4th:			
5th:			
6th:			

Vehicle Reference 1 Car Moving from N to S Going ahead other
On main carriageway No skidding, jack-knifing or overturning
First point of impact Front Parts damaged: Age of Driver 22 Sex of Driver Male Breath test Not provided (medical reasons)
Casualty Reference: 1 Age: 22 Male Driver/rider Severity: Fatal Injured by vehicle: 1
Ped. Location Ped. Movement Ped. Direction Ped. Injury School pupil: 0

Accidents between dates **01/06/2017** **and** **31/05/2020** (36) months

Selection: **Notes:**

Selected using Manual Selection

CONFIDENTIAL ROAD ACCIDENT INFORMATION: NOT TO BE TRANSMITTED TO THIRD PARTIES

Vehicle Reference 2 Car Moving from S to N Going ahead other

On main carriageway No skidding, jack-knifing or overturning

First point of impact Front Parts damaged: Age of Driver 52 Sex of Driver Male Breath test Not provided (medical reasons)

Casualty Reference: 2 Age: 52 Male Driver/rider Severity: Serious Injured by vehicle: 2

Ped. Location Ped. Movement Ped. Direction Ped. Injury School pupil: 0

Accidents between dates **01/06/2017** **and** **31/05/2020** (36) months
Selection: **Notes:**
Selected using Manual Selection

CONFIDENTIAL ROAD ACCIDENT INFORMATION: NOT TO BE TRANSMITTED TO THIRD PARTIES

Sunday 17/06/2018 Time 1300 Serious at B4033 GREAT HORWOOD ROAD NR WASHBROOK FARM
E: 476822 N: 229025 Junction Detail: 0 Control
Fine without high winds Road surface Dry Daylight
MC1 TRAVELLING NORTH TOWARDS GREAT HORWOOD, RAN WIDE ON LHB INTO PATH OF C2 TRAVELLING OPPOSITE DIRECTION.
Road Type Single carriageway Vehicles 2 Casualties 1 Police Ref. 43180203457 Speed limit 60
Crossing: Control 0 Facilities 0 Local Authority: E07 Parish: 1661 Accident Type(s) NN

Causation

	Factor:	Participant:	Confidence:
1st:	Poor turn or manoevre	Vehicle 001	Very Likely
2nd:			
3rd:			
4th:			
5th:			
6th:			

Vehicle Reference 1 Motor Cycle over 125 cc and up to 500cc Moving from S to N Going ahead left bend
On main carriageway No skidding, jack-knifing or overturning
First point of impact Offside Parts damaged: Age of Driver 60 Sex of Driver Male Breath test Negative
Casualty Reference: 1 Age: 60 Male Driver/rider Severity: Serious Injured by vehicle: 1
Ped. Location Ped. Movement Ped. Direction Ped. Injury School pupil: 0

Vehicle Reference 2 Car Moving from N to S Going ahead right bend
On main carriageway No skidding, jack-knifing or overturning
First point of impact Front Parts damaged: Age of Driver 72 Sex of Driver Male Breath test Negative

Accidents between dates **01/06/2017** **and** **31/05/2020** (36) months
Selection: **Notes:**
Selected using Manual Selection

CONFIDENTIAL ROAD ACCIDENT INFORMATION: NOT TO BE TRANSMITTED TO THIRD PARTIES

Sunday 28/10/2018 Time 1816 Slight at B4033 WINSLOW ROAD GREAT HORWOOD N MILL FARM
E: 476639 N: 230031 Junction Detail: 0 Control
Fine without high winds Road surface Wet/Damp Darkness: no street lighting
C1 TRAV N TWDS GREAT HORWOOD DRVR LOST CON SLIGHT RHB LEFT CWAY N/SIDE
Road Type Single carriageway Vehicles 1 Casualties 1 Police Ref. 43180339867 Speed limit 60
Crossing: Control 0 Facilities 0 Local Authority: E07 Parish: 1556 Accident Type(s) SG

Causation

	Factor:	Participant:	Confidence:
1st:	Loss of control	Vehicle 1	Very Likely
2nd:	Poor or defective road surface	Vehicle 1	Very Likely
3rd:	Inexperienced or learner driver/rider	Vehicle 1	Possible
4th:	Road layout (eg bend, hill etc.)	Vehicle 1	Possible
5th:			
6th:			

Vehicle Reference 1 Car Moving from S to NE Going ahead right bend
On main carriageway No skidding, jack-knifing or overturning
First point of impact Nearside Parts damaged: Age of Driver 18 Sex of Driver Male Breath test Negative
Casualty Reference: 1 Age: 18 Male Driver/rider Severity: Slight Injured by vehicle: 1
Ped. Location Ped. Movement Ped. Direction Ped. Injury School pupil: 0

Accidents between dates **01/06/2017** **and** **31/05/2020** (36) months
Selection: **Notes:**
Selected using Manual Selection

CONFIDENTIAL ROAD ACCIDENT INFORMATION: NOT TO BE TRANSMITTED TO THIRD PARTIES

Sunday 25/11/2018 Time 2228 Slight at C46 STATION ROAD MURSLEY (LOC TKN FROM MAP REF)
E: 480252 N: 229654 Junction Detail: 0 Control
Fine without high winds Road surface Wet/Damp Darkness: no street lighting
C1 TRAV NW TWDS LITTLE HORWOOD LEFT CWAY N/SIDE ENT DITCH COLL WITH TREE
Road Type Single carriageway Vehicles 1 Casualties 1 Police Ref. 43180361153 Speed limit 60
Crossing: Control 0 Facilities 0 Local Authority: E07 Parish: 1572 Accident Type(s) SG

Causation

	Factor:	Participant:	Confidence:
1st:	Illness or disability, mental or physical	Vehicle 1	Possible
2nd:			
3rd:			
4th:			
5th:			
6th:			

Vehicle Reference 1 Car Moving from SE to N Going ahead other
On main carriageway No skidding, jack-knifing or overturning
First point of impact Front Parts damaged: Age of Driver 19 Sex of Driver Male Breath test Not requested
Casualty Reference: 1 Age: 19 Male Driver/rider Severity: Slight Injured by vehicle: 1
Ped. Location Ped. Movement Ped. Direction Ped. Injury School pupil: 0

Accidents between dates **01/06/2017** **and** **31/05/2020** (36) months
Selection: **Notes:**
Selected using Manual Selection

CONFIDENTIAL ROAD ACCIDENT INFORMATION: NOT TO BE TRANSMITTED TO THIRD PARTIES

Friday 11/01/2019 Time 0748 Slight at C17 WHADDON ROAD MURSLEY OUTSIDE CRABTREE FARM
E: 481226 N: 231043 Junction Detail: 0 Control
Fine without high winds Road surface Dry Daylight
NO SUMMARY, IT APPRS C1 TRAV SE TWDS MURSLEY LOST CON LEFT CWAY N/SIDE
Road Type Single carriageway Vehicles 1 Casualties 1 Police Ref. 43190011627 Speed limit 60
Crossing: Control 0 Facilities 0 Local Authority: E07 Parish: 1572 Accident Type(s) SG

Causation

	Factor:	Participant:	Confidence:
1st:	Distraction in vehicle	Vehicle 1	Very Likely
2nd:			
3rd:			
4th:			
5th:			
6th:			

Vehicle Reference 1 Car Moving from N to SE Going ahead other
On main carriageway No skidding, jack-knifing or overturning
First point of impact Front Parts damaged: Age of Driver 51 Sex of Driver Male Breath test Negative
Casualty Reference: 1 Age: 51 Male Driver/rider Severity: Slight Injured by vehicle: 1
Ped. Location Ped. Movement Ped. Direction Ped. Injury School pupil: 0

Accidents between dates **01/06/2017** **and** **31/05/2020** (36) months

Selection: **Notes:**

Selected using Manual Selection

CONFIDENTIAL ROAD ACCIDENT INFORMATION: NOT TO BE TRANSMITTED TO THIRD PARTIES

Friday 23/08/2019 Time 1413 Slight at C23 WINSLOW ROAD JNCT C46 MURSLEY ROAD, LITTLE HORWOOD.
E: 479065 N: 230706 Junction Detail: 9 Control 4
Fine without high winds Road surface Dry Daylight

GV1 (POLICE) TRAV S ON WINSLOW RD TWDS WINSLOW WHEN C2 TRNED R OUT OF JNCT TO TRAV N INTO PATH OF GV1. C2 FAILED TO GIVE WAY.

Road Type Single carriageway Vehicles 2 Casualties 2 Police Ref. 43190261715 Speed limit 30
Crossing: Control 0 Facilities 0 Local Authority: E07 Parish: 1569 Accident Type(s) RD

Causation

	Factor:	Participant:	Confidence:
1st:	Disobeyed Give Way or Stop sign or markings	Vehicle 2	Very Likely
2nd:			
3rd:			
4th:			
5th:			
6th:			

Vehicle Reference 1 Goods over 3.5 tonnes and under 7.5 tonnes mgw Moving from N to S Going ahead other
On main carriageway No skidding, jack-knifing or overturning
First point of impact Front Parts damaged: Age of Driver 51 Sex of Driver Female Breath test Negative
Casualty Reference: 1 Age: 51 Female Driver/rider Severity: Slight Injured by vehicle: 1

Ped. Location Ped. Movement Ped. Direction Ped. Injury School pupil: 0

Accidents between dates **01/06/2017** **and** **31/05/2020** (36) months

Selection: **Notes:**

Selected using Manual Selection

CONFIDENTIAL ROAD ACCIDENT INFORMATION: NOT TO BE TRANSMITTED TO THIRD PARTIES

Vehicle Reference 2 Car Moving from SE to N Turning right

On main carriageway No skidding, jack-knifing or overturning

First point of impact Front Parts damaged: Age of Driver 35 Sex of Driver Female Breath test Negative

Casualty Reference: 2 Age: 35 Female Driver/rider Severity: Slight Injured by vehicle: 2

Ped. Location Ped. Movement Ped. Direction Ped. Injury School pupil: 0

Accidents between dates **01/06/2017** **and** **31/05/2020** (36) months
Selection: **Notes:**
Selected using Manual Selection

CONFIDENTIAL ROAD ACCIDENT INFORMATION: NOT TO BE TRANSMITTED TO THIRD PARTIES

Monday 13/04/2020 Time 0711 Slight at C23 WINSLOW ROAD LITTLE HORWOOD O/SIDE PROPERTY CALLED HAREFIELDS
E: 478415 N: 229408 Junction Detail: 0 Control
Fine without high winds Road surface Dry Daylight
C1 TRAV SW LOST CON RHB CRSSD CWAY COLL HEAD ON GV2 TRAV OPP DIR
Road Type Single carriageway Vehicles 2 Casualties 2 Police Ref. 43200111735 Speed limit 60
Crossing: Control 0 Facilities 0 Local Authority: E07 Parish: 1569 Accident Type(s) NN

Causation

	Factor:	Participant:	Confidence:
1st:	Careless/Reckless/In a hurry	Vehicle 1	Very Likely
2nd:	Poor turn or manoevre	Vehicle 1	Very Likely
3rd:			
4th:			
5th:			
6th:			

Vehicle Reference 1 Car Moving from N to S Going ahead right bend
On main carriageway No skidding, jack-knifing or overturning
First point of impact Front Parts damaged: Age of Driver 31 Sex of Driver Female Breath test Negative
Casualty Reference: 1 Age: 31 Female Driver/rider Severity: Slight Injured by vehicle: 1
Ped. Location Ped. Movement Ped. Direction Ped. Injury School pupil: 0

Vehicle Reference 2 Goods 3.5 tonnes mgw and under Moving from S to NE Going ahead other
On main carriageway No skidding, jack-knifing or overturning
First point of impact Front Parts damaged: Age of Driver 35 Sex of Driver Male Breath test Negative
Casualty Reference: 2 Age: 35 Male Driver/rider Severity: Slight Injured by vehicle: 2
Ped. Location Ped. Movement Ped. Direction Ped. Injury School pupil: 0

Accidents between dates **01/06/2017** **and** **31/05/2020** (36) months

Selection:
Selected using Manual Selection

Notes:

CONFIDENTIAL ROAD ACCIDENT INFORMATION: NOT TO BE TRANSMITTED TO THIRD PARTIES

Accidents involving:

	Fatal	Serious	Slight	Total
Motor vehicles only (excluding 2-wheels)	1	1	9	11
2-wheeled motor vehicles	0	1	0	1
Pedal cycles	0	0	1	1
Horses & other	0	0	0	0
Total	1	2	10	13

Casualties:

	Fatal	Serious	Slight	Total
Vehicle driver	1	2	11	14
Passenger	0	0	1	1
Motorcycle rider	0	1	0	1
Cyclist	0	0	1	1
Pedestrian	0	0	0	0
Other	0	0	0	0
Total	1	3	13	17

Number of casualties meeting the criteria: **17**

Appendix D

ACCESSIBILITY FIGURES

Public

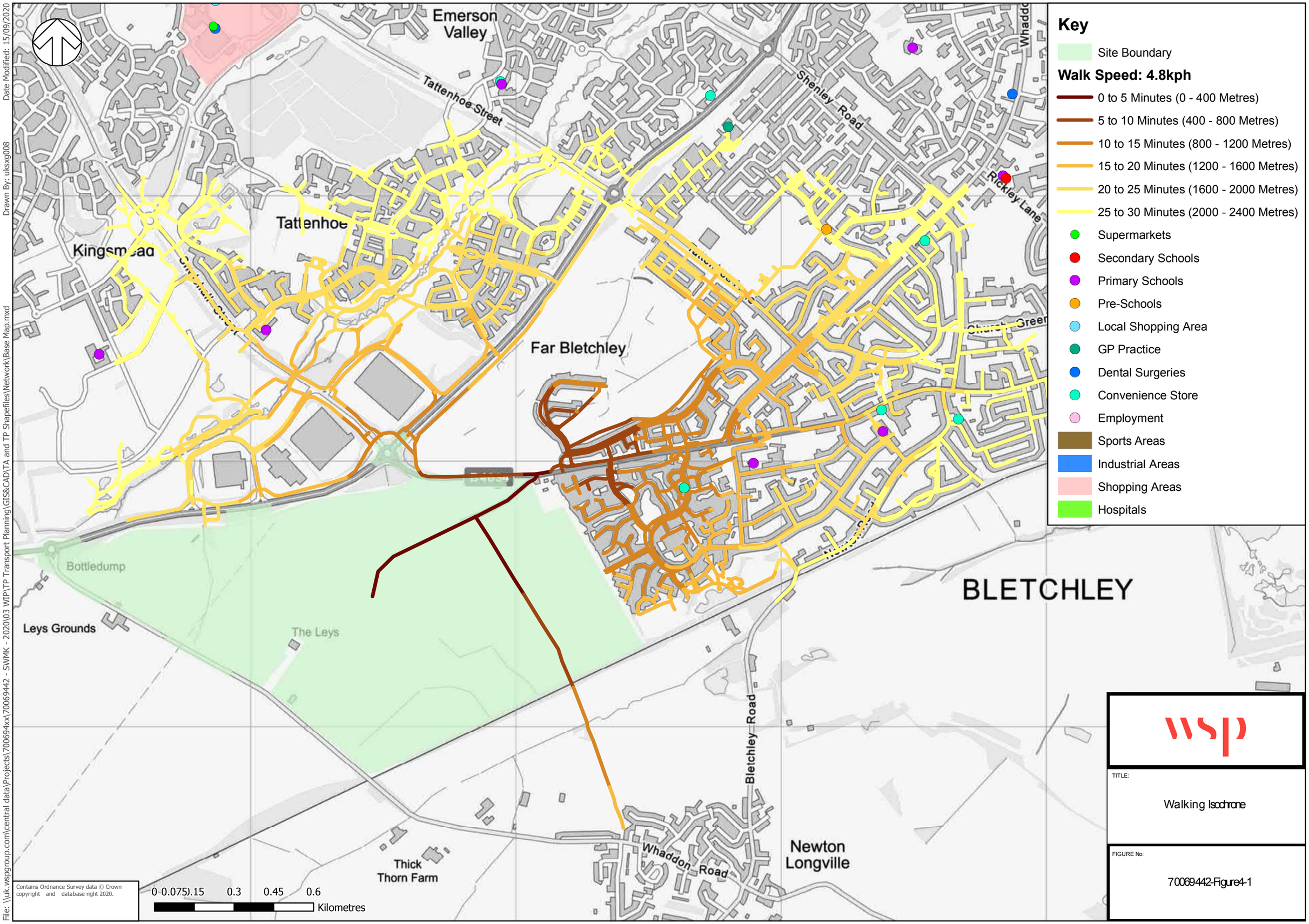

File: \\uk.wspgroup.com\central data\Projects\700694xx\70069442 - SWMK - 2020\03 WIP\TP Transport Planning\GIS&CAD\TA and TP Shapefiles\Network\Base Map.mxd

Drawn By: uksxg008

Date Modified: 15/09/2020

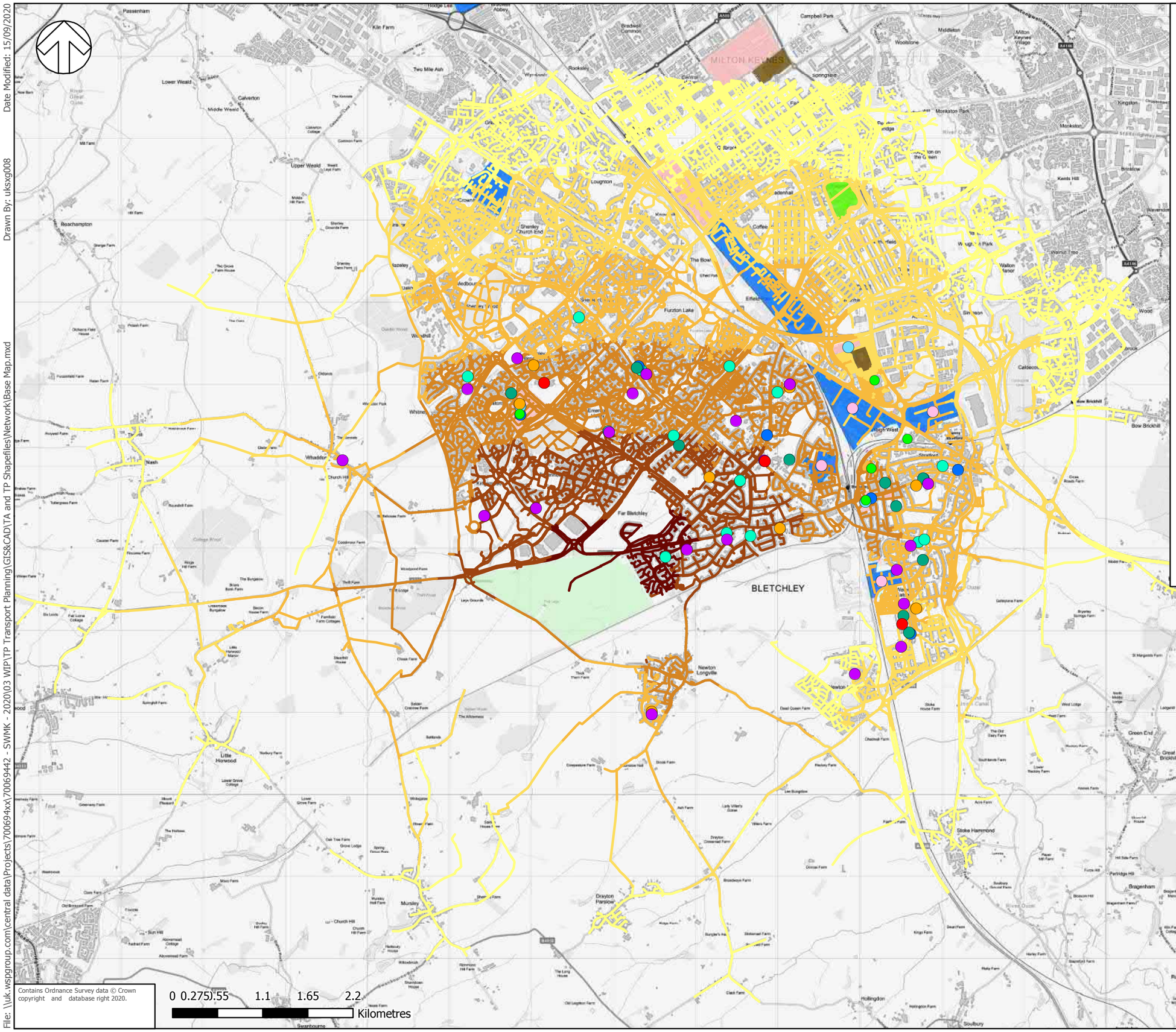

Key

Site Boundary

Cycle Speed: 16kph

- 0 to 5 Minutes (0 - 1333 Metres)
- 5 to 10 Minutes (1333 - 2667 Metres)
- 10 to 15 Minutes (2667 - 4000 Metres)
- 15 to 20 Minutes (4000 - 5333 Metres)
- 20 to 25 Minutes (5333 - 6667 Metres)
- 25 to 30 Minutes (6667 - 8000 Metres)
- Supermarkets
- Secondary Schools
- Primary Schools
- Pre-Schools
- Local Shopping Area
- GP Practice
- Dental Surgeries
- Convenience Store
- Employment
- Sports Areas
- Industrial Areas
- Shopping Areas
- Hospitals

wsp

TITLE:

Cycling Isochrone

FIGURE No:

70069442-Figure4-2

File: \\uk.wspgroup.com\central data\Projects\700694xx\70069442 - SWMK - 2020\03 WIP\TP Transport Planning\GIS&CAD\TA and TP Shapefiles\Network\Base Map.mxd

Drawn By: uksxg008

Date Modified: 15/09/2020

Appendix E

A421 SITE ACCESS PROPOSALS

Public

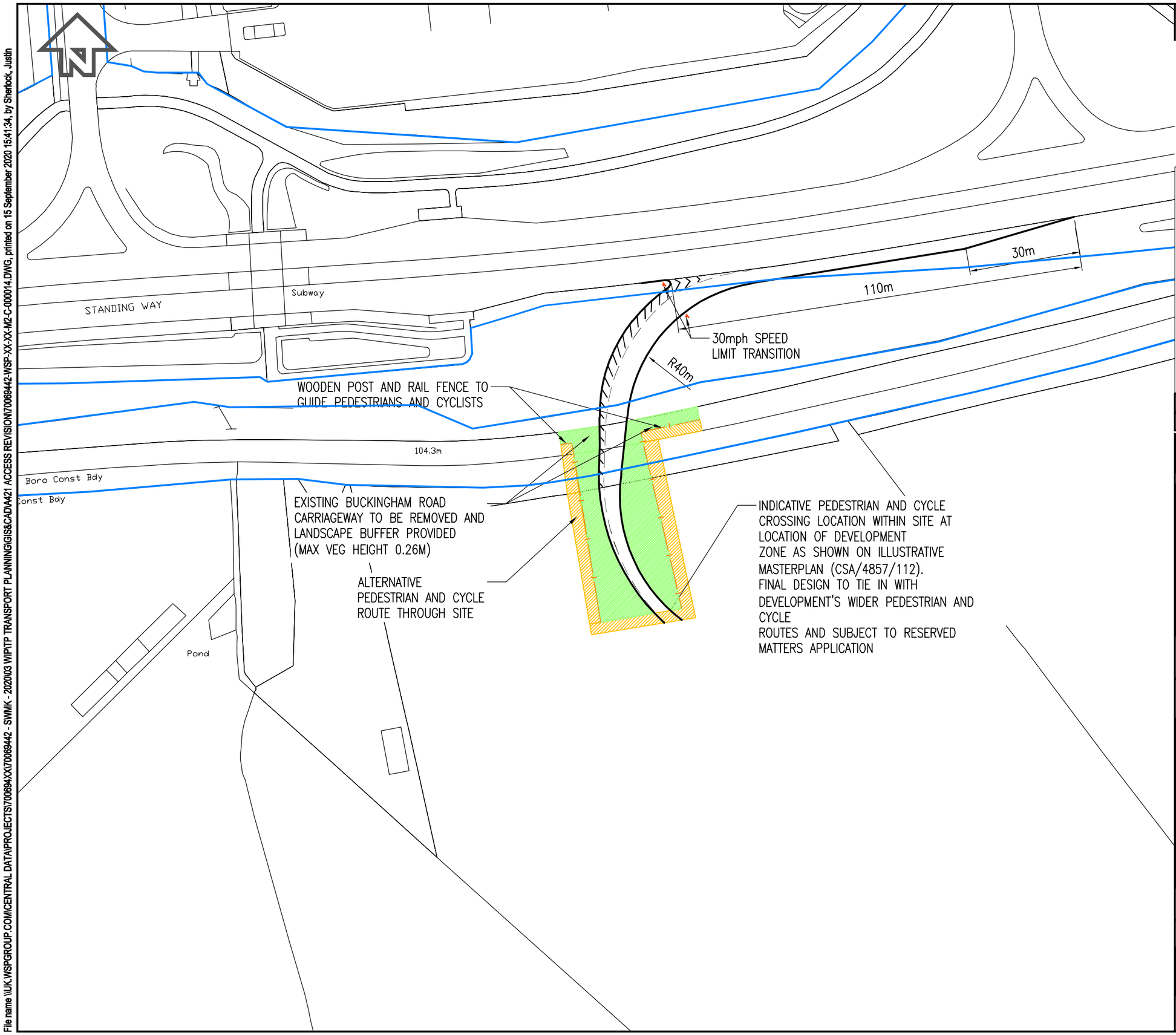

DO NOT SCALE

NOTES

1. ALL MEASUREMENTS IN METRES UNLESS OTHERWISE STATED.
2. THIS DESIGN IS PRELIMINARY AND THIS DRAWING IS NOT SUITABLE FOR CONSTRUCTION.

KEY

Highway Boundary

REV	DATE	BY	DESCRIPTION	CHK	APP
P01	15/09/2020	SB	FIRST ISSUE	NR	JS

DRAWING STATUS: S2 - FOR INFORMATION

wsp
Mountbatten House, Basing View, Basingstoke, RG21 4HJ, UK
T+ 44 (0) 1256 318 800, F+ 44 (0) 1256 318 700
wsp.com

CLIENT: South West Milton Keynes Consortium

ARCHITECT: CSA

PROJECT: South West Milton Keynes

TITLE: A421 Access Proposals

SCALE @ A3:	CHECKED:		APPROVED:
NTS	NR		JS
PROJECT No: 70069442	DESIGNED: SB	DRAWN: SB	DATE: September 20

DRAWING No: 70069442-WSP-XX-XX-M2-C-000014 REV: P01

© WSP UK Ltd

File name \\UK.WSPGROUP.COM\CENTRAL DATA\PROJECTS\70069442XX\70069442 - SWMK - 2020\03 WIP\TP TRANSPORT PLANNING\GIS&CAD\A421 ACCESS REVISION\70069442-WSP-XX-XX-M2-C-000014.DWG, printed on 15 September 2020 15:41:34, by Sherlock, Justin

Appendix F

TRICS TRIP RATES

Public

Filtering Summary

Land Use	03/O	RESIDENTIAL/RETIREMENT AND CARE COMMUNI
Selected Trip Rate Calculation Parameter Range	36-149 DWELLS	
Actual Trip Rate Calculation Parameter Range	36-137 DWELLS	
Date Range	Minimum: 01/01/12	Maximum: 27/11/15
Parking Spaces Range	All Surveys Included	
Parking Spaces Per Dwelling Range:	All Surveys Included	
Bedrooms Per Dwelling Range:	All Surveys Included	
Percentage of dwellings privately owned:	All Surveys Included	
Days of the week selected	Tuesday	2
	Wednesday	2
	Thursday	2
	Friday	2
Main Location Types selected	Edge of Town Centre	1
	Suburban Area (PPS6 Out of Centre)	3
	Edge of Town	3
	Neighbourhood Centre (PPS6 Local Centre)	1
Population <1 Mile ranges selected	5,001 to 10,000	1
	15,001 to 20,000	1
	20,001 to 25,000	3
	25,001 to 50,000	3
Population <5 Mile ranges selected	50,001 to 75,000	1
	75,001 to 100,000	1
	100,001 to 125,000	2
	125,001 to 250,000	2
	250,001 to 500,000	1
	500,001 or More	1
Car Ownership <5 Mile ranges selected	0.6 to 1.0	1
	1.1 to 1.5	7
PTAL Rating	No PTAL Present	8

Calculation Reference: AUDIT-100321-200825-0820

TRIP RATE CALCULATION SELECTION PARAMETERS:

Land Use : 03 - RESIDENTIAL
Category : O - RETIREMENT AND CARE COMMUNITY
MULTI-MODAL VEHICLES

Selected regions and areas:

02	SOUTH EAST		
	KC	KENT	2 days
	OX	OXFORDSHIRE	1 days
	SC	SURREY	1 days
03	SOUTH WEST		
	BR	BRISTOL CITY	2 days
	DV	DEVON	1 days
	NS	NORTH SOMERSET	1 days

This section displays the number of survey days per TRICS® sub-region in the selected set

Primary Filtering selection:

This data displays the chosen trip rate parameter and its selected range. Only sites that fall within the parameter range are included in the trip rate calculation.

Parameter: No of Dwellings
Actual Range: 36 to 137 (units:)
Range Selected by User: 36 to 149 (units:)

Parking Spaces Range: All Surveys Included

Parking Spaces per Dwelling Range: All Surveys Included

Bedrooms per Dwelling Range: All Surveys Included

Percentage of dwellings privately owned: All Surveys Included

Public Transport Provision:
Selection by: Include all surveys

Date Range: 01/01/12 to 27/11/15

This data displays the range of survey dates selected. Only surveys that were conducted within this date range are included in the trip rate calculation.

Selected survey days:

Tuesday	2 days
Wednesday	2 days
Thursday	2 days
Friday	2 days

This data displays the number of selected surveys by day of the week.

Selected survey types:

Manual count	8 days
Directional ATC Count	0 days

This data displays the number of manual classified surveys and the number of unclassified ATC surveys, the total adding up to the overall number of surveys in the selected set. Manual surveys are undertaken using staff, whilst ATC surveys are undertaking using machines.

Selected Locations:

Edge of Town Centre	1
Suburban Area (PPS6 Out of Centre)	3
Edge of Town	3
Neighbourhood Centre (PPS6 Local Centre)	1

This data displays the number of surveys per main location category within the selected set. The main location categories consist of Free Standing, Edge of Town, Suburban Area, Neighbourhood Centre, Edge of Town Centre, Town Centre and Not Known.

Selected Location Sub Categories:

Residential Zone	8

This data displays the number of surveys per location sub-category within the selected set. The location sub-categories consist of Commercial Zone, Industrial Zone, Development Zone, Residential Zone, Retail Zone, Built-Up Zone, Village, Out of Town, High Street and No Sub Category.

Secondary Filtering selection:

Use Class:

Not Known	1 days

This data displays the number of surveys per Use Class classification within the selected set. The Use Classes Order 2005 has been used for this purpose, which can be found within the Library module of TRICS®.

Population within 1 mile:

5,001 to 10,000	1 days
15,001 to 20,000	1 days
20,001 to 25,000	3 days
25,001 to 50,000	3 days

This data displays the number of selected surveys within stated 1-mile radii of population.

Population within 5 miles:

50,001 to 75,000	1 days
75,001 to 100,000	1 days
100,001 to 125,000	2 days
125,001 to 250,000	2 days
250,001 to 500,000	1 days
500,001 or More	1 days

This data displays the number of selected surveys within stated 5-mile radii of population.

Car ownership within 5 miles:

0.6 to 1.0	1 days
1.1 to 1.5	7 days

This data displays the number of selected surveys within stated ranges of average cars owned per residential dwelling, within a radius of 5-miles of selected survey sites.

Travel Plan:

Yes	1 days
No	7 days

This data displays the number of surveys within the selected set that were undertaken at sites with Travel Plans in place, and the number of surveys that were undertaken at sites without Travel Plans.

PTAL Rating:

No PTAL Present	8 days

This data displays the number of selected surveys with PTAL Ratings.

LIST OF SITES relevant to selection parameters

1 BR-03-O-01 RETIREMENT VILLAGE BRISTOL CITY
HOLLWAY ROAD
BRISTOL
STOCKWOOD
Neighbourhood Centre (PPS6 Local Centre)
Residential Zone
Total No of Dwellings: 58
Survey date: TUESDAY 22/09/15 Survey Type: MANUAL

2 BR-03-O-02 RETIREMENT VILLAGE BRISTOL CITY
MEG THATCHERS GARDENS
BRISTOL

Suburban Area (PPS6 Out of Centre)
Residential Zone
Total No of Dwellings: 49
Survey date: FRIDAY 18/09/15 Survey Type: MANUAL

3 DV-03-O-01 RETIREMENT VILLAGE DEVON
ST MARYCHURCH ROAD
TORQUAY
ST MARYCHURCH
Suburban Area (PPS6 Out of Centre)
Residential Zone
Total No of Dwellings: 45
Survey date: TUESDAY 29/09/15 Survey Type: MANUAL

4 KC-03-O-01 RETIREMENT VILLAGE KENT
RUMFIELDS ROAD
BROADSTAIRS

Suburban Area (PPS6 Out of Centre)
Residential Zone
Total No of Dwellings: 40
Survey date: THURSDAY 19/11/15 Survey Type: MANUAL

5 KC-03-O-02 RETIREMENT VILLAGE KENT
EASTERN AVENUE
ASHFORD

Edge of Town Centre
Residential Zone
Total No of Dwellings: 36
Survey date: FRIDAY 20/11/15 Survey Type: MANUAL

6 NS-03-O-01 RETIREMENT VILLAGE NORTH SOMERSET
DIAMOND BATCH
WESTON SUPER MARE
WORLE
Edge of Town
Residential Zone
Total No of Dwellings: 137
Survey date: THURSDAY 24/09/15 Survey Type: MANUAL

7 OX-03-O-01 RETIREMENT VILLAGE OXFORDSHIRE
RUSKIN ROAD
BANBURY
EASINGTON
Edge of Town
Residential Zone
Total No of Dwellings: 70
Survey date: WEDNESDAY 11/11/15 Survey Type: MANUAL

8 SC-03-O-01 RETIREMENT VILLAGE SURREY
WESTFIELD ROAD
WOKING

Edge of Town
Residential Zone
Total No of Dwellings: 39
Survey date: WEDNESDAY 18/11/15 Survey Type: MANUAL

This section provides a list of all survey sites and days in the selected set. For each individual survey site, it displays a unique site reference code and site address, the selected trip rate calculation parameter and its value, the day of the week and date of each survey, and whether the survey was a manual classified count or an ATC count.

TRIP RATE for Land Use 03 - RESIDENTIAL/O - RETIREMENT AND CARE COMMUNITY
MULTI-MODAL VEHICLES
Calculation factor: 1 DWELLS
BOLD print indicates peak (busiest) period

	ARRIVALS			DEPARTURES			TOTALS		
Time Range	No. Days	Ave. DWELLS	Trip Rate	No. Days	Ave. DWELLS	Trip Rate	No. Days	Ave. DWELLS	Trip Rate
00:00 - 01:00									
01:00 - 02:00									
02:00 - 03:00									
03:00 - 04:00									
04:00 - 05:00									
05:00 - 06:00									
06:00 - 07:00									
07:00 - 08:00	8	59	0.061	8	59	0.032	8	59	0.093
08:00 - 09:00	8	59	0.124	8	59	0.076	8	59	0.200
09:00 - 10:00	8	59	0.205	8	59	0.133	8	59	0.338
10:00 - 11:00	8	59	0.160	8	59	0.160	8	59	0.320
11:00 - 12:00	8	59	0.156	8	59	0.162	8	59	0.318
12:00 - 13:00	8	59	0.131	8	59	0.152	8	59	0.283
13:00 - 14:00	8	59	0.173	8	59	0.186	8	59	0.359
14:00 - 15:00	8	59	0.154	8	59	0.186	8	59	0.340
15:00 - 16:00	8	59	0.146	8	59	0.179	8	59	0.325
16:00 - 17:00	8	59	0.127	8	59	0.135	8	59	0.262
17:00 - 18:00	8	59	0.072	8	59	0.110	8	59	0.182
18:00 - 19:00	8	59	0.065	8	59	0.063	8	59	0.128
19:00 - 20:00	8	59	0.036	8	59	0.044	8	59	0.080
20:00 - 21:00	8	59	0.038	8	59	0.059	8	59	0.097
21:00 - 22:00									
22:00 - 23:00									
23:00 - 24:00									
Total Rates:			1.648			1.677			3.325

This section displays the trip rate results based on the selected set of surveys and the selected count type (shown just above the table). It is split by three main columns, representing arrivals trips, departures trips, and total trips (arrivals plus departures). Within each of these main columns are three sub-columns. These display the number of survey days where count data is included (per time period), the average value of the selected trip rate calculation parameter (per time period), and the trip rate result (per time period). Total trip rates (the sum of the column) are also displayed at the foot of the table.

*To obtain a trip rate, the average (mean) trip rate parameter value (TRP) is first calculated for all selected survey days that have count data available for the stated time period. The average (mean) number of arrivals, departures or totals (whichever applies) is also calculated (COUNT) for all selected survey days that have count data available for the stated time period. Then, the average count is divided by the average trip rate parameter value, and multiplied by the stated calculation factor (shown just above the table and abbreviated here as FACT). So, the method is: COUNT/TRP*FACT. Trip rates are then rounded to 3 decimal places.*

The survey data, graphs and all associated supporting information, contained within the TRICS Database are published by TRICS Consortium Limited ("the Company") and the Company claims copyright and database rights in this published work. The Company authorises those who possess a current TRICS licence to access the TRICS Database and copy the data contained within the TRICS Database for the licence holders' use only. Any resulting copy must retain all copyrights and other proprietary notices, and any disclaimer contained thereon.

The Company accepts no responsibility for loss which may arise from reliance on data contained in the TRICS Database. [No warranty of any kind, express or implied, is made as to the data contained in the TRICS Database.]

Parameter summary

Trip rate parameter range selected:	36 - 137 (units:)
Survey date date range:	01/01/12 - 27/11/15
Number of weekdays (Monday-Friday):	8
Number of Saturdays:	0
Number of Sundays:	0
Surveys automatically removed from selection:	0
Surveys manually removed from selection:	0

This section displays a quick summary of some of the data filtering selections made by the TRICS® user. The trip rate calculation parameter range of all selected surveys is displayed first, followed by the range of minimum and maximum survey dates selected by the user. Then, the total number of selected weekdays and weekend days in the selected set of surveys are show. Finally, the number of survey days that have been manually removed from the selected set outside of the standard filtering procedure are displayed.

TRIP RATE for Land Use 03 - RESIDENTIAL/O - RETIREMENT AND CARE COMMUNITY
MULTI-MODAL TAXIS
Calculation factor: 1 DWELLS
BOLD print indicates peak (busiest) period

Time Range	ARRIVALS			DEPARTURES			TOTALS		
	No. Days	Ave. DWELLS	Trip Rate	No. Days	Ave. DWELLS	Trip Rate	No. Days	Ave. DWELLS	Trip Rate
00:00 - 01:00									
01:00 - 02:00									
02:00 - 03:00									
03:00 - 04:00									
04:00 - 05:00									
05:00 - 06:00									
06:00 - 07:00									
07:00 - 08:00	8	59	0.000	8	59	0.000	8	59	0.000
08:00 - 09:00	8	59	0.006	8	59	0.006	8	59	0.012
09:00 - 10:00	8	59	0.017	8	59	0.017	8	59	0.034
10:00 - 11:00	8	59	0.013	8	59	0.013	8	59	0.026
11:00 - 12:00	8	59	0.017	8	59	0.017	8	59	0.034
12:00 - 13:00	8	59	0.008	8	59	0.008	8	59	0.016
13:00 - 14:00	8	59	0.017	8	59	0.017	8	59	0.034
14:00 - 15:00	8	59	0.023	8	59	0.021	8	59	0.044
15:00 - 16:00	8	59	0.013	8	59	0.013	8	59	0.026
16:00 - 17:00	8	59	0.015	8	59	0.017	8	59	0.032
17:00 - 18:00	8	59	0.002	8	59	0.002	8	59	0.004
18:00 - 19:00	8	59	0.004	8	59	0.004	8	59	0.008
19:00 - 20:00	8	59	0.000	8	59	0.000	8	59	0.000
20:00 - 21:00	8	59	0.004	8	59	0.004	8	59	0.008
21:00 - 22:00									
22:00 - 23:00									
23:00 - 24:00									
Total Rates:			0.139			0.139			0.278

This section displays the trip rate results based on the selected set of surveys and the selected count type (shown just above the table). It is split by three main columns, representing arrivals trips, departures trips, and total trips (arrivals plus departures). Within each of these main columns are three sub-columns. These display the number of survey days where count data is included (per time period), the average value of the selected trip rate calculation parameter (per time period), and the trip rate result (per time period). Total trip rates (the sum of the column) are also displayed at the foot of the table.

*To obtain a trip rate, the average (mean) trip rate parameter value (TRP) is first calculated for all selected survey days that have count data available for the stated time period. The average (mean) number of arrivals, departures or totals (whichever applies) is also calculated (COUNT) for all selected survey days that have count data available for the stated time period. Then, the average count is divided by the average trip rate parameter value, and multiplied by the stated calculation factor (shown just above the table and abbreviated here as FACT). So, the method is: COUNT/TRP*FACT. Trip rates are then rounded to 3 decimal places.*

TRIP RATE for Land Use 03 - RESIDENTIAL/O - RETIREMENT AND CARE COMMUNITY
MULTI-MODAL OGVS
Calculation factor: 1 DWELLS
BOLD print indicates peak (busiest) period

Time Range	ARRIVALS			DEPARTURES			TOTALS		
	No. Days	Ave. DWELLS	Trip Rate	No. Days	Ave. DWELLS	Trip Rate	No. Days	Ave. DWELLS	Trip Rate
00:00 - 01:00									
01:00 - 02:00									
02:00 - 03:00									
03:00 - 04:00									
04:00 - 05:00									
05:00 - 06:00									
06:00 - 07:00									
07:00 - 08:00	8	59	0.008	8	59	0.006	8	59	0.014
08:00 - 09:00	8	59	0.006	8	59	0.006	8	59	0.012
09:00 - 10:00	8	59	0.002	8	59	0.004	8	59	0.006
10:00 - 11:00	8	59	0.000	8	59	0.000	8	59	0.000
11:00 - 12:00	8	59	0.002	8	59	0.002	8	59	0.004
12:00 - 13:00	8	59	0.002	8	59	0.002	8	59	0.004
13:00 - 14:00	8	59	0.004	8	59	0.002	8	59	0.006
14:00 - 15:00	8	59	0.000	8	59	0.002	8	59	0.002
15:00 - 16:00	8	59	0.002	8	59	0.002	8	59	0.004
16:00 - 17:00	8	59	0.000	8	59	0.000	8	59	0.000
17:00 - 18:00	8	59	0.000	8	59	0.000	8	59	0.000
18:00 - 19:00	8	59	0.002	8	59	0.002	8	59	0.004
19:00 - 20:00	8	59	0.000	8	59	0.000	8	59	0.000
20:00 - 21:00	8	59	0.000	8	59	0.000	8	59	0.000
21:00 - 22:00									
22:00 - 23:00									
23:00 - 24:00									
Total Rates:			0.028			0.028			0.056

This section displays the trip rate results based on the selected set of surveys and the selected count type (shown just above the table). It is split by three main columns, representing arrivals trips, departures trips, and total trips (arrivals plus departures). Within each of these main columns are three sub-columns. These display the number of survey days where count data is included (per time period), the average value of the selected trip rate calculation parameter (per time period), and the trip rate result (per time period). Total trip rates (the sum of the column) are also displayed at the foot of the table.

*To obtain a trip rate, the average (mean) trip rate parameter value (TRP) is first calculated for all selected survey days that have count data available for the stated time period. The average (mean) number of arrivals, departures or totals (whichever applies) is also calculated (COUNT) for all selected survey days that have count data available for the stated time period. Then, the average count is divided by the average trip rate parameter value, and multiplied by the stated calculation factor (shown just above the table and abbreviated here as FACT). So, the method is: COUNT/TRP*FACT. Trip rates are then rounded to 3 decimal places.*

TRIP RATE for Land Use 03 - RESIDENTIAL/O - RETIREMENT AND CARE COMMUNITY
MULTI-MODAL PSVS
Calculation factor: 1 DWELLS
BOLD print indicates peak (busiest) period

Time Range	ARRIVALS			DEPARTURES			TOTALS		
	No. Days	Ave. DWELLS	Trip Rate	No. Days	Ave. DWELLS	Trip Rate	No. Days	Ave. DWELLS	Trip Rate
00:00 - 01:00									
01:00 - 02:00									
02:00 - 03:00									
03:00 - 04:00									
04:00 - 05:00									
05:00 - 06:00									
06:00 - 07:00									
07:00 - 08:00	8	59	0.000	8	59	0.000	8	59	0.000
08:00 - 09:00	8	59	0.000	8	59	0.000	8	59	0.000
09:00 - 10:00	8	59	0.015	8	59	0.015	8	59	0.030
10:00 - 11:00	8	59	0.008	8	59	0.008	8	59	0.016
11:00 - 12:00	8	59	0.002	8	59	0.002	8	59	0.004
12:00 - 13:00	8	59	0.002	8	59	0.002	8	59	0.004
13:00 - 14:00	8	59	0.008	8	59	0.008	8	59	0.016
14:00 - 15:00	8	59	0.004	8	59	0.006	8	59	0.010
15:00 - 16:00	8	59	0.017	8	59	0.015	8	59	0.032
16:00 - 17:00	8	59	0.000	8	59	0.000	8	59	0.000
17:00 - 18:00	8	59	0.004	8	59	0.004	8	59	0.008
18:00 - 19:00	8	59	0.000	8	59	0.000	8	59	0.000
19:00 - 20:00	8	59	0.000	8	59	0.000	8	59	0.000
20:00 - 21:00	8	59	0.000	8	59	0.000	8	59	0.000
21:00 - 22:00									
22:00 - 23:00									
23:00 - 24:00									
Total Rates:			0.060			0.060			0.120

This section displays the trip rate results based on the selected set of surveys and the selected count type (shown just above the table). It is split by three main columns, representing arrivals trips, departures trips, and total trips (arrivals plus departures). Within each of these main columns are three sub-columns. These display the number of survey days where count data is included (per time period), the average value of the selected trip rate calculation parameter (per time period), and the trip rate result (per time period). Total trip rates (the sum of the column) are also displayed at the foot of the table.

*To obtain a trip rate, the average (mean) trip rate parameter value (TRP) is first calculated for all selected survey days that have count data available for the stated time period. The average (mean) number of arrivals, departures or totals (whichever applies) is also calculated (COUNT) for all selected survey days that have count data available for the stated time period. Then, the average count is divided by the average trip rate parameter value, and multiplied by the stated calculation factor (shown just above the table and abbreviated here as FACT). So, the method is: COUNT/TRP*FACT. Trip rates are then rounded to 3 decimal places.*

TRIP RATE for Land Use 03 - RESIDENTIAL/O - RETIREMENT AND CARE COMMUNITY
MULTI-MODAL CYCLISTS
Calculation factor: 1 DWELLS
BOLD print indicates peak (busiest) period

Time Range	ARRIVALS			DEPARTURES			TOTALS		
	No. Days	Ave. DWELLS	Trip Rate	No. Days	Ave. DWELLS	Trip Rate	No. Days	Ave. DWELLS	Trip Rate
00:00 - 01:00									
01:00 - 02:00									
02:00 - 03:00									
03:00 - 04:00									
04:00 - 05:00									
05:00 - 06:00									
06:00 - 07:00									
07:00 - 08:00	8	59	0.004	8	59	0.004	8	59	0.008
08:00 - 09:00	8	59	0.002	8	59	0.000	8	59	0.002
09:00 - 10:00	8	59	0.000	8	59	0.004	8	59	0.004
10:00 - 11:00	8	59	0.004	8	59	0.000	8	59	0.004
11:00 - 12:00	8	59	0.002	8	59	0.002	8	59	0.004
12:00 - 13:00	8	59	0.000	8	59	0.000	8	59	0.000
13:00 - 14:00	8	59	0.000	8	59	0.000	8	59	0.000
14:00 - 15:00	8	59	0.000	8	59	0.002	8	59	0.002
15:00 - 16:00	8	59	0.000	8	59	0.000	8	59	0.000
16:00 - 17:00	8	59	0.000	8	59	0.000	8	59	0.000
17:00 - 18:00	8	59	0.000	8	59	0.000	8	59	0.000
18:00 - 19:00	8	59	0.002	8	59	0.000	8	59	0.002
19:00 - 20:00	8	59	0.000	8	59	0.002	8	59	0.002
20:00 - 21:00	8	59	0.000	8	59	0.000	8	59	0.000
21:00 - 22:00									
22:00 - 23:00									
23:00 - 24:00									
Total Rates:			0.014			0.014			0.028

This section displays the trip rate results based on the selected set of surveys and the selected count type (shown just above the table). It is split by three main columns, representing arrivals trips, departures trips, and total trips (arrivals plus departures). Within each of these main columns are three sub-columns. These display the number of survey days where count data is included (per time period), the average value of the selected trip rate calculation parameter (per time period), and the trip rate result (per time period). Total trip rates (the sum of the column) are also displayed at the foot of the table.

*To obtain a trip rate, the average (mean) trip rate parameter value (TRP) is first calculated for all selected survey days that have count data available for the stated time period. The average (mean) number of arrivals, departures or totals (whichever applies) is also calculated (COUNT) for all selected survey days that have count data available for the stated time period. Then, the average count is divided by the average trip rate parameter value, and multiplied by the stated calculation factor (shown just above the table and abbreviated here as FACT). So, the method is: COUNT/TRP*FACT. Trip rates are then rounded to 3 decimal places.*

TRIP RATE for Land Use 03 - RESIDENTIAL/O - RETIREMENT AND CARE COMMUNITY
MULTI-MODAL VEHICLE OCCUPANTS
Calculation factor: 1 DWELLS
BOLD print indicates peak (busiest) period

	ARRIVALS			DEPARTURES			TOTALS		
Time Range	No. Days	Ave. DWELLS	Trip Rate	No. Days	Ave. DWELLS	Trip Rate	No. Days	Ave. DWELLS	Trip Rate
00:00 - 01:00									
01:00 - 02:00									
02:00 - 03:00									
03:00 - 04:00									
04:00 - 05:00									
05:00 - 06:00									
06:00 - 07:00									
07:00 - 08:00	8	59	0.065	8	59	0.032	8	59	0.097
08:00 - 09:00	8	59	0.148	8	59	0.078	8	59	0.226
09:00 - 10:00	8	59	0.219	8	59	0.129	8	59	0.348
10:00 - 11:00	8	59	0.184	8	59	0.194	8	59	0.378
11:00 - 12:00	8	59	0.188	8	59	0.186	8	59	0.374
12:00 - 13:00	8	59	0.160	8	59	0.194	8	59	0.354
13:00 - 14:00	8	59	0.203	8	59	0.234	8	59	0.437
14:00 - 15:00	8	59	0.184	8	59	0.230	8	59	0.414
15:00 - 16:00	8	59	0.165	8	59	0.203	8	59	0.368
16:00 - 17:00	8	59	0.158	8	59	0.148	8	59	0.306
17:00 - 18:00	8	59	0.116	8	59	0.143	8	59	0.259
18:00 - 19:00	8	59	0.082	8	59	0.076	8	59	0.158
19:00 - 20:00	8	59	0.042	8	59	0.061	8	59	0.103
20:00 - 21:00	8	59	0.053	8	59	0.074	8	59	0.127
21:00 - 22:00									
22:00 - 23:00									
23:00 - 24:00									
Total Rates:			1.967			1.982			3.949

This section displays the trip rate results based on the selected set of surveys and the selected count type (shown just above the table). It is split by three main columns, representing arrivals trips, departures trips, and total trips (arrivals plus departures). Within each of these main columns are three sub-columns. These display the number of survey days where count data is included (per time period), the average value of the selected trip rate calculation parameter (per time period), and the trip rate result (per time period). Total trip rates (the sum of the column) are also displayed at the foot of the table.

*To obtain a trip rate, the average (mean) trip rate parameter value (TRP) is first calculated for all selected survey days that have count data available for the stated time period. The average (mean) number of arrivals, departures or totals (whichever applies) is also calculated (COUNT) for all selected survey days that have count data available for the stated time period. Then, the average count is divided by the average trip rate parameter value, and multiplied by the stated calculation factor (shown just above the table and abbreviated here as FACT). So, the method is: COUNT/TRP*FACT. Trip rates are then rounded to 3 decimal places.*

TRIP RATE for Land Use 03 - RESIDENTIAL/O - RETIREMENT AND CARE COMMUNITY
MULTI-MODAL PEDESTRIANS
Calculation factor: 1 DWELLS
BOLD print indicates peak (busiest) period

	ARRIVALS			DEPARTURES			TOTALS		
Time Range	No. Days	Ave. DWELLS	Trip Rate	No. Days	Ave. DWELLS	Trip Rate	No. Days	Ave. DWELLS	Trip Rate
00:00 - 01:00									
01:00 - 02:00									
02:00 - 03:00									
03:00 - 04:00									
04:00 - 05:00									
05:00 - 06:00									
06:00 - 07:00									
07:00 - 08:00	8	59	0.025	8	59	0.019	8	59	0.044
08:00 - 09:00	8	59	0.030	8	59	0.023	8	59	0.053
09:00 - 10:00	8	59	0.059	8	59	0.046	8	59	0.105
10:00 - 11:00	8	59	0.032	8	59	0.057	8	59	0.089
11:00 - 12:00	8	59	0.065	8	59	0.065	8	59	0.130
12:00 - 13:00	8	59	0.068	8	59	0.063	8	59	0.131
13:00 - 14:00	8	59	0.061	8	59	0.061	8	59	0.122
14:00 - 15:00	8	59	0.032	8	59	0.061	8	59	0.093
15:00 - 16:00	8	59	0.042	8	59	0.053	8	59	0.095
16:00 - 17:00	8	59	0.044	8	59	0.030	8	59	0.074
17:00 - 18:00	8	59	0.025	8	59	0.019	8	59	0.044
18:00 - 19:00	8	59	0.008	8	59	0.017	8	59	0.025
19:00 - 20:00	8	59	0.002	8	59	0.019	8	59	0.021
20:00 - 21:00	8	59	0.004	8	59	0.002	8	59	0.006
21:00 - 22:00									
22:00 - 23:00									
23:00 - 24:00									
Total Rates:			0.497			0.535			1.032

This section displays the trip rate results based on the selected set of surveys and the selected count type (shown just above the table). It is split by three main columns, representing arrivals trips, departures trips, and total trips (arrivals plus departures). Within each of these main columns are three sub-columns. These display the number of survey days where count data is included (per time period), the average value of the selected trip rate calculation parameter (per time period), and the trip rate result (per time period). Total trip rates (the sum of the column) are also displayed at the foot of the table.

*To obtain a trip rate, the average (mean) trip rate parameter value (TRP) is first calculated for all selected survey days that have count data available for the stated time period. The average (mean) number of arrivals, departures or totals (whichever applies) is also calculated (COUNT) for all selected survey days that have count data available for the stated time period. Then, the average count is divided by the average trip rate parameter value, and multiplied by the stated calculation factor (shown just above the table and abbreviated here as FACT). So, the method is: COUNT/TRP*FACT. Trip rates are then rounded to 3 decimal places.*

TRIP RATE for Land Use 03 - RESIDENTIAL/O - RETIREMENT AND CARE COMMUNITY

MULTI-MODAL BUS/TRAM PASSENGERS

Calculation factor: 1 DWELLS

BOLD print indicates peak (busiest) period

Time Range	ARRIVALS			DEPARTURES			TOTALS		
	No. Days	Ave. DWELLS	Trip Rate	No. Days	Ave. DWELLS	Trip Rate	No. Days	Ave. DWELLS	Trip Rate
00:00 - 01:00									
01:00 - 02:00									
02:00 - 03:00									
03:00 - 04:00									
04:00 - 05:00									
05:00 - 06:00									
06:00 - 07:00									
07:00 - 08:00	8	59	0.002	8	59	0.000	8	59	0.002
08:00 - 09:00	8	59	0.006	8	59	0.000	8	59	0.006
09:00 - 10:00	8	59	0.008	8	59	0.006	8	59	0.014
10:00 - 11:00	8	59	0.011	8	59	0.004	8	59	0.015
11:00 - 12:00	8	59	0.004	8	59	0.013	8	59	0.017
12:00 - 13:00	8	59	0.004	8	59	0.000	8	59	0.004
13:00 - 14:00	8	59	0.004	8	59	0.008	8	59	0.012
14:00 - 15:00	8	59	0.011	8	59	0.008	8	59	0.019
15:00 - 16:00	8	59	0.008	8	59	0.006	8	59	0.014
16:00 - 17:00	8	59	0.004	8	59	0.002	8	59	0.006
17:00 - 18:00	8	59	0.002	8	59	0.000	8	59	0.002
18:00 - 19:00	8	59	0.000	8	59	0.000	8	59	0.000
19:00 - 20:00	8	59	0.004	8	59	0.002	8	59	0.006
20:00 - 21:00	8	59	0.000	8	59	0.000	8	59	0.000
21:00 - 22:00									
22:00 - 23:00									
23:00 - 24:00									
Total Rates:			0.068			0.049			0.117

This section displays the trip rate results based on the selected set of surveys and the selected count type (shown just above the table). It is split by three main columns, representing arrivals trips, departures trips, and total trips (arrivals plus departures). Within each of these main columns are three sub-columns. These display the number of survey days where count data is included (per time period), the average value of the selected trip rate calculation parameter (per time period), and the trip rate result (per time period). Total trip rates (the sum of the column) are also displayed at the foot of the table.

*To obtain a trip rate, the average (mean) trip rate parameter value (TRP) is first calculated for all selected survey days that have count data available for the stated time period. The average (mean) number of arrivals, departures or totals (whichever applies) is also calculated (COUNT) for all selected survey days that have count data available for the stated time period. Then, the average count is divided by the average trip rate parameter value, and multiplied by the stated calculation factor (shown just above the table and abbreviated here as FACT). So, the method is: COUNT/TRP*FACT. Trip rates are then rounded to 3 decimal places.*

TRIP RATE for Land Use 03 - RESIDENTIAL/O - RETIREMENT AND CARE COMMUNITY
MULTI-MODAL TOTAL RAIL PASSENGERS
Calculation factor: 1 DWELLS
BOLD print indicates peak (busiest) period

	ARRIVALS			DEPARTURES			TOTALS		
Time Range	No. Days	Ave. DWELLS	Trip Rate	No. Days	Ave. DWELLS	Trip Rate	No. Days	Ave. DWELLS	Trip Rate
00:00 - 01:00									
01:00 - 02:00									
02:00 - 03:00									
03:00 - 04:00									
04:00 - 05:00									
05:00 - 06:00									
06:00 - 07:00									
07:00 - 08:00	8	59	0.002	8	59	0.000	8	59	0.002
08:00 - 09:00	8	59	0.000	8	59	0.000	8	59	0.000
09:00 - 10:00	8	59	0.000	8	59	0.000	8	59	0.000
10:00 - 11:00	8	59	0.002	8	59	0.000	8	59	0.002
11:00 - 12:00	8	59	0.000	8	59	0.002	8	59	0.002
12:00 - 13:00	8	59	0.000	8	59	0.000	8	59	0.000
13:00 - 14:00	8	59	0.000	8	59	0.000	8	59	0.000
14:00 - 15:00	8	59	0.000	8	59	0.000	8	59	0.000
15:00 - 16:00	8	59	0.000	8	59	0.000	8	59	0.000
16:00 - 17:00	8	59	0.000	8	59	0.000	8	59	0.000
17:00 - 18:00	8	59	0.000	8	59	0.000	8	59	0.000
18:00 - 19:00	8	59	0.002	8	59	0.000	8	59	0.002
19:00 - 20:00	8	59	0.000	8	59	0.000	8	59	0.000
20:00 - 21:00	8	59	0.000	8	59	0.000	8	59	0.000
21:00 - 22:00									
22:00 - 23:00									
23:00 - 24:00									
Total Rates:			0.006			0.002			0.008

This section displays the trip rate results based on the selected set of surveys and the selected count type (shown just above the table). It is split by three main columns, representing arrivals trips, departures trips, and total trips (arrivals plus departures). Within each of these main columns are three sub-columns. These display the number of survey days where count data is included (per time period), the average value of the selected trip rate calculation parameter (per time period), and the trip rate result (per time period). Total trip rates (the sum of the column) are also displayed at the foot of the table.

*To obtain a trip rate, the average (mean) trip rate parameter value (TRP) is first calculated for all selected survey days that have count data available for the stated time period. The average (mean) number of arrivals, departures or totals (whichever applies) is also calculated (COUNT) for all selected survey days that have count data available for the stated time period. Then, the average count is divided by the average trip rate parameter value, and multiplied by the stated calculation factor (shown just above the table and abbreviated here as FACT). So, the method is: COUNT/TRP*FACT. Trip rates are then rounded to 3 decimal places.*

TRIP RATE for Land Use 03 - RESIDENTIAL/O - RETIREMENT AND CARE COMMUNITY
MULTI-MODAL COACH PASSENGERS
Calculation factor: 1 DWELLS
BOLD print indicates peak (busiest) period

Time Range	ARRIVALS			DEPARTURES			TOTALS		
	No. Days	Ave. DWELLS	Trip Rate	No. Days	Ave. DWELLS	Trip Rate	No. Days	Ave. DWELLS	Trip Rate
00:00 - 01:00									
01:00 - 02:00									
02:00 - 03:00									
03:00 - 04:00									
04:00 - 05:00									
05:00 - 06:00									
06:00 - 07:00									
07:00 - 08:00	8	59	0.000	8	59	0.000	8	59	0.000
08:00 - 09:00	8	59	0.000	8	59	0.000	8	59	0.000
09:00 - 10:00	8	59	0.030	8	59	0.011	8	59	0.041
10:00 - 11:00	8	59	0.042	8	59	0.000	8	59	0.042
11:00 - 12:00	8	59	0.000	8	59	0.004	8	59	0.004
12:00 - 13:00	8	59	0.000	8	59	0.004	8	59	0.004
13:00 - 14:00	8	59	0.008	8	59	0.015	8	59	0.023
14:00 - 15:00	8	59	0.000	8	59	0.025	8	59	0.025
15:00 - 16:00	8	59	0.021	8	59	0.051	8	59	0.072
16:00 - 17:00	8	59	0.000	8	59	0.000	8	59	0.000
17:00 - 18:00	8	59	0.006	8	59	0.000	8	59	0.006
18:00 - 19:00	8	59	0.000	8	59	0.000	8	59	0.000
19:00 - 20:00	8	59	0.000	8	59	0.000	8	59	0.000
20:00 - 21:00	8	59	0.000	8	59	0.000	8	59	0.000
21:00 - 22:00									
22:00 - 23:00									
23:00 - 24:00									
Total Rates:			0.107			0.110			0.217

This section displays the trip rate results based on the selected set of surveys and the selected count type (shown just above the table). It is split by three main columns, representing arrivals trips, departures trips, and total trips (arrivals plus departures). Within each of these main columns are three sub-columns. These display the number of survey days where count data is included (per time period), the average value of the selected trip rate calculation parameter (per time period), and the trip rate result (per time period). Total trip rates (the sum of the column) are also displayed at the foot of the table.

*To obtain a trip rate, the average (mean) trip rate parameter value (TRP) is first calculated for all selected survey days that have count data available for the stated time period. The average (mean) number of arrivals, departures or totals (whichever applies) is also calculated (COUNT) for all selected survey days that have count data available for the stated time period. Then, the average count is divided by the average trip rate parameter value, and multiplied by the stated calculation factor (shown just above the table and abbreviated here as FACT). So, the method is: COUNT/TRP*FACT. Trip rates are then rounded to 3 decimal places.*

TRIP RATE for Land Use 03 - RESIDENTIAL/O - RETIREMENT AND CARE COMMUNITY
MULTI-MODAL PUBLIC TRANSPORT USERS
Calculation factor: 1 DWELLS
BOLD print indicates peak (busiest) period

Time Range	ARRIVALS			DEPARTURES			TOTALS		
	No. Days	Ave. DWELLS	Trip Rate	No. Days	Ave. DWELLS	Trip Rate	No. Days	Ave. DWELLS	Trip Rate
00:00 - 01:00									
01:00 - 02:00									
02:00 - 03:00									
03:00 - 04:00									
04:00 - 05:00									
05:00 - 06:00									
06:00 - 07:00									
07:00 - 08:00	8	59	0.004	8	59	0.000	8	59	0.004
08:00 - 09:00	8	59	0.006	8	59	0.000	8	59	0.006
09:00 - 10:00	8	59	0.038	8	59	0.017	8	59	0.055
10:00 - 11:00	8	59	0.055	8	59	0.004	8	59	0.059
11:00 - 12:00	8	59	0.004	8	59	0.019	8	59	0.023
12:00 - 13:00	8	59	0.004	8	59	0.004	8	59	0.008
13:00 - 14:00	8	59	0.013	8	59	0.023	8	59	0.036
14:00 - 15:00	8	59	0.011	8	59	0.034	8	59	0.045
15:00 - 16:00	8	59	0.030	8	59	0.057	8	59	0.087
16:00 - 17:00	8	59	0.004	8	59	0.002	8	59	0.006
17:00 - 18:00	8	59	0.008	8	59	0.000	8	59	0.008
18:00 - 19:00	8	59	0.002	8	59	0.000	8	59	0.002
19:00 - 20:00	8	59	0.004	8	59	0.002	8	59	0.006
20:00 - 21:00	8	59	0.000	8	59	0.000	8	59	0.000
21:00 - 22:00									
22:00 - 23:00									
23:00 - 24:00									
Total Rates:			0.183			0.162			0.345

This section displays the trip rate results based on the selected set of surveys and the selected count type (shown just above the table). It is split by three main columns, representing arrivals trips, departures trips, and total trips (arrivals plus departures). Within each of these main columns are three sub-columns. These display the number of survey days where count data is included (per time period), the average value of the selected trip rate calculation parameter (per time period), and the trip rate result (per time period). Total trip rates (the sum of the column) are also displayed at the foot of the table.

*To obtain a trip rate, the average (mean) trip rate parameter value (TRP) is first calculated for all selected survey days that have count data available for the stated time period. The average (mean) number of arrivals, departures or totals (whichever applies) is also calculated (COUNT) for all selected survey days that have count data available for the stated time period. Then, the average count is divided by the average trip rate parameter value, and multiplied by the stated calculation factor (shown just above the table and abbreviated here as FACT). So, the method is: COUNT/TRP*FACT. Trip rates are then rounded to 3 decimal places.*

TRIP RATE for Land Use 03 - RESIDENTIAL/O - RETIREMENT AND CARE COMMUNITY

MULTI-MODAL TOTAL PEOPLE

Calculation factor: 1 DWELLS

BOLD print indicates peak (busiest) period

	ARRIVALS			DEPARTURES			TOTALS		
Time Range	No. Days	Ave. DWELLS	Trip Rate	No. Days	Ave. DWELLS	Trip Rate	No. Days	Ave. DWELLS	Trip Rate
00:00 - 01:00									
01:00 - 02:00									
02:00 - 03:00									
03:00 - 04:00									
04:00 - 05:00									
05:00 - 06:00									
06:00 - 07:00									
07:00 - 08:00	8	59	0.099	8	59	0.055	8	59	0.154
08:00 - 09:00	8	59	0.186	8	59	0.101	8	59	0.287
09:00 - 10:00	8	59	0.316	8	59	0.196	8	59	0.512
10:00 - 11:00	8	59	0.274	8	59	0.255	8	59	0.529
11:00 - 12:00	8	59	0.259	8	59	0.272	8	59	0.531
12:00 - 13:00	8	59	0.232	8	59	0.262	8	59	0.494
13:00 - 14:00	8	59	0.276	8	59	0.319	8	59	0.595
14:00 - 15:00	8	59	0.226	8	59	0.327	8	59	0.553
15:00 - 16:00	8	59	0.236	8	59	0.312	8	59	0.548
16:00 - 17:00	8	59	0.207	8	59	0.179	8	59	0.386
17:00 - 18:00	8	59	0.150	8	59	0.162	8	59	0.312
18:00 - 19:00	8	59	0.095	8	59	0.093	8	59	0.188
19:00 - 20:00	8	59	0.049	8	59	0.084	8	59	0.133
20:00 - 21:00	8	59	0.057	8	59	0.076	8	59	0.133
21:00 - 22:00									
22:00 - 23:00									
23:00 - 24:00									
Total Rates:			2.662			2.693			5.355

This section displays the trip rate results based on the selected set of surveys and the selected count type (shown just above the table). It is split by three main columns, representing arrivals trips, departures trips, and total trips (arrivals plus departures). Within each of these main columns are three sub-columns. These display the number of survey days where count data is included (per time period), the average value of the selected trip rate calculation parameter (per time period), and the trip rate result (per time period). Total trip rates (the sum of the column) are also displayed at the foot of the table.

*To obtain a trip rate, the average (mean) trip rate parameter value (TRP) is first calculated for all selected survey days that have count data available for the stated time period. The average (mean) number of arrivals, departures or totals (whichever applies) is also calculated (COUNT) for all selected survey days that have count data available for the stated time period. Then, the average count is divided by the average trip rate parameter value, and multiplied by the stated calculation factor (shown just above the table and abbreviated here as FACT). So, the method is: COUNT/TRP*FACT. Trip rates are then rounded to 3 decimal places.*

TRIP RATE for Land Use 03 - RESIDENTIAL/O - RETIREMENT AND CARE COMMUNITY
MULTI-MODAL CARS
Calculation factor: 1 DWELLS
BOLD print indicates peak (busiest) period

	ARRIVALS			DEPARTURES			TOTALS		
Time Range	No. Days	Ave. DWELLS	Trip Rate	No. Days	Ave. DWELLS	Trip Rate	No. Days	Ave. DWELLS	Trip Rate
00:00 - 01:00									
01:00 - 02:00									
02:00 - 03:00									
03:00 - 04:00									
04:00 - 05:00									
05:00 - 06:00									
06:00 - 07:00									
07:00 - 08:00	8	59	0.051	8	59	0.023	8	59	0.074
08:00 - 09:00	8	59	0.110	8	59	0.059	8	59	0.169
09:00 - 10:00	8	59	0.156	8	59	0.091	8	59	0.247
10:00 - 11:00	8	59	0.114	8	59	0.110	8	59	0.224
11:00 - 12:00	8	59	0.116	8	59	0.124	8	59	0.240
12:00 - 13:00	8	59	0.099	8	59	0.118	8	59	0.217
13:00 - 14:00	8	59	0.122	8	59	0.137	8	59	0.259
14:00 - 15:00	8	59	0.114	8	59	0.146	8	59	0.260
15:00 - 16:00	8	59	0.103	8	59	0.141	8	59	0.244
16:00 - 17:00	8	59	0.103	8	59	0.108	8	59	0.211
17:00 - 18:00	8	59	0.059	8	59	0.091	8	59	0.150
18:00 - 19:00	8	59	0.051	8	59	0.055	8	59	0.106
19:00 - 20:00	8	59	0.034	8	59	0.040	8	59	0.074
20:00 - 21:00	8	59	0.034	8	59	0.051	8	59	0.085
21:00 - 22:00									
22:00 - 23:00									
23:00 - 24:00									
Total Rates:			1.266			1.294			2.560

This section displays the trip rate results based on the selected set of surveys and the selected count type (shown just above the table). It is split by three main columns, representing arrivals trips, departures trips, and total trips (arrivals plus departures). Within each of these main columns are three sub-columns. These display the number of survey days where count data is included (per time period), the average value of the selected trip rate calculation parameter (per time period), and the trip rate result (per time period). Total trip rates (the sum of the column) are also displayed at the foot of the table.

*To obtain a trip rate, the average (mean) trip rate parameter value (TRP) is first calculated for all selected survey days that have count data available for the stated time period. The average (mean) number of arrivals, departures or totals (whichever applies) is also calculated (COUNT) for all selected survey days that have count data available for the stated time period. Then, the average count is divided by the average trip rate parameter value, and multiplied by the stated calculation factor (shown just above the table and abbreviated here as FACT). So, the method is: COUNT/TRP*FACT. Trip rates are then rounded to 3 decimal places.*

TRIP RATE for Land Use 03 - RESIDENTIAL/O - RETIREMENT AND CARE COMMUNITY
MULTI-MODAL LGVS
Calculation factor: 1 DWELLS
BOLD print indicates peak (busiest) period

Time Range	ARRIVALS			DEPARTURES			TOTALS		
	No. Days	Ave. DWELLS	Trip Rate	No. Days	Ave. DWELLS	Trip Rate	No. Days	Ave. DWELLS	Trip Rate
00:00 - 01:00									
01:00 - 02:00									
02:00 - 03:00									
03:00 - 04:00									
04:00 - 05:00									
05:00 - 06:00									
06:00 - 07:00									
07:00 - 08:00	8	59	0.002	8	59	0.002	8	59	0.004
08:00 - 09:00	8	59	0.002	8	59	0.004	8	59	0.006
09:00 - 10:00	8	59	0.015	8	59	0.006	8	59	0.021
10:00 - 11:00	8	59	0.025	8	59	0.030	8	59	0.055
11:00 - 12:00	8	59	0.019	8	59	0.017	8	59	0.036
12:00 - 13:00	8	59	0.019	8	59	0.021	8	59	0.040
13:00 - 14:00	8	59	0.021	8	59	0.021	8	59	0.042
14:00 - 15:00	8	59	0.013	8	59	0.011	8	59	0.024
15:00 - 16:00	8	59	0.011	8	59	0.008	8	59	0.019
16:00 - 17:00	8	59	0.008	8	59	0.011	8	59	0.019
17:00 - 18:00	8	59	0.006	8	59	0.013	8	59	0.019
18:00 - 19:00	8	59	0.008	8	59	0.002	8	59	0.010
19:00 - 20:00	8	59	0.002	8	59	0.004	8	59	0.006
20:00 - 21:00	8	59	0.000	8	59	0.004	8	59	0.004
21:00 - 22:00									
22:00 - 23:00									
23:00 - 24:00									
Total Rates:			0.151			0.154			0.305

This section displays the trip rate results based on the selected set of surveys and the selected count type (shown just above the table). It is split by three main columns, representing arrivals trips, departures trips, and total trips (arrivals plus departures). Within each of these main columns are three sub-columns. These display the number of survey days where count data is included (per time period), the average value of the selected trip rate calculation parameter (per time period), and the trip rate result (per time period). Total trip rates (the sum of the column) are also displayed at the foot of the table.

*To obtain a trip rate, the average (mean) trip rate parameter value (TRP) is first calculated for all selected survey days that have count data available for the stated time period. The average (mean) number of arrivals, departures or totals (whichever applies) is also calculated (COUNT) for all selected survey days that have count data available for the stated time period. Then, the average count is divided by the average trip rate parameter value, and multiplied by the stated calculation factor (shown just above the table and abbreviated here as FACT). So, the method is: COUNT/TRP*FACT. Trip rates are then rounded to 3 decimal places.*

Appendix G

TRIP DISTRIBUTION AND TRAFFIC FLOW DIAGRAMS

Public

WU03EW - Location of usual residence and place of work by method of travel to work (MSOA level)

ONS Crown Copyright Reserved [from Nomis on 14 April 2020]

population	All usual residents aged 16 and over in employment the week before the census
units	Persons
date	2011
method of travel to work	Driving a car or van

usual residence : 2011 super output area - middle layer	E02003654 : Aylesbury Vale 003	E02003486 : Milton Keynes 028	E02003487 : Milton Keynes 029	E02003489 : Milton Keynes 031	E02003490 : Milton Keynes 032	Total		New Assignment
E02003487 : Milton Keynes 029	22	27	44	95	10	198	5.4%	J5A J18B
E02003486 : Milton Keynes 028	14	63	14	62	15	168	4.6%	J5A J18D and J5D
E02003483 : Milton Keynes 025	16	39	10	77	25	167	4.6%	J5A J18D J13D and J5D J12B
E02003489 : Milton Keynes 031	14	14	11	69	16	124	3.4%	J5B J2B J1A
E02003484 : Milton Keynes 026	11	30	10	56	10	117	3.2%	J5A J18A J17D J14A
E02003477 : Milton Keynes 019	15	17	11	67	5	115	3.1%	J5D J12A
E02003654 : Aylesbury Vale 003	66	8	3	28	9	114	3.1%	J6C J7D J8B and J6B J4A
E02003485 : Milton Keynes 027	9	13	9	67	14	112	3.1%	J5A J18A J17B
E02003475 : Milton Keynes 017	8	14	7	61	21	111	3.0%	J5A J18A J17A J16A J15C
E02003490 : Milton Keynes 032	8	12	3	49	32	104	2.8%	J5B J2B J1C
E02003488 : Milton Keynes 030	11	8	4	55	25	103	2.8%	J5B J2B J1B
E02003480 : Milton Keynes 022	8	11	6	51	20	96	2.6%	J5B J2B J1A
E02003474 : Milton Keynes 016	6	14	5	43	12	80	2.2%	J5A J18A J17A J16A J15A
E02003460 : Milton Keynes 002	13	10	1	44	11	79	2.2%	J5D J12A
E02003482 : Milton Keynes 024	2	9	5	46	8	70	1.9%	J5A J18A J17A J16A J15A
E02003463 : Milton Keynes 005	5	16	2	33	11	67	1.8%	J5A J18A J17A J16A J15A
E02005688 : South Northamptonshire 008	15	8	4	30	9	66	1.8%	J5D J12A
E02003481 : Milton Keynes 023	2	15	6	36	5	64	1.7%	J5B J2B J1B
E02003656 : Aylesbury Vale 005	45	7	0	10	2	64	1.7%	J6C J7D J8C J9D J10C
E02003468 : Milton Keynes 010	11	5	5	29	12	62	1.7%	J5D J12A
E02003473 : Milton Keynes 015	5	13	1	35	5	59	1.6%	J5D J12A
E02003479 : Milton Keynes 021	3	18	3	29	6	59	1.6%	J5A J18A J17A J16A J15C
E02003476 : Milton Keynes 018	6	13	4	33	2	58	1.6%	J5A J18A J17A J16A J15A
E02003465 : Milton Keynes 007	1	9	5	32	10	57	1.6%	J5A J18A J17A J16A J15A
E02003652 : Aylesbury Vale 001	30	4	1	20	2	57	1.6%	J6C J7D J8C J9D J10D
E02003466 : Milton Keynes 008	9	7	3	29	8	56	1.5%	J5D J12A
E02003472 : Milton Keynes 014	3	16	4	23	10	56	1.5%	J5A J18A J17D J14A and J5A J18A J17A J16A J15C
E02003478 : Milton Keynes 020	5	7	2	35	5	54	1.5%	J5D J12A
E02003462 : Milton Keynes 004	6	9	0	35	3	53	1.4%	J5A J18A J17A J16A J15A
E02003657 : Aylesbury Vale 006	22	6	2	18	5	53	1.4%	J6B J4A J3C
E02003653 : Aylesbury Vale 002	23	3	2	21	3	52	1.4%	J6C J7D J8C J9D J10D
E02003461 : Milton Keynes 003	9	8	4	25	4	50	1.4%	J5A J18A J17A J16A J15A
E02003643 : Central Bedfordshire 024	5	8	1	23	7	44	1.2%	J6B J4A J3B
E02003469 : Milton Keynes 011	4	6	2	28	4	44	1.2%	J5D J12A
E02005683 : South Northamptonshire 003	8	7	2	23	3	43	1.2%	J5D J12B J13D
E02003471 : Milton Keynes 013	7	10	0	18	6	41	1.1%	J5A J18A J17A J16A J15C
E02003655 : Aylesbury Vale 004	21	4	1	9	3	38	1.0%	J6C J7D J8C J9D J10D
E02003639 : Central Bedfordshire 021	7	4	4	14	8	37	1.0%	J6B J4A J3B
E02003467 : Milton Keynes 009	4	5	5	20	3	37	1.0%	J5A J18A J17D 14A
E02003459 : Milton Keynes 001	4	1	3	28	0	36	1.0%	J5D J12A
E02003464 : Milton Keynes 006	0	10	0	20	5	35	1.0%	J5A J18A J17A J16A J15A
E02003638 : Central Bedfordshire 020	4	6	0	20	3	33	0.9%	J6B J4A J3B
E02003470 : Milton Keynes 012	5	4	2	16	6	33	0.9%	J5D J12A
E02003605 : Central Bedfordshire 007	2	3	2	11	8	26	0.7%	J5A J18A J17A J16A J15A
E02003640 : Central Bedfordshire 022	7	2	0	12	5	26	0.7%	J6B J4A J3B
E02005684 : South Northamptonshire 004	1	2	1	15	4	23	0.6%	J5D J12A
E02003637 : Central Bedfordshire 019	2	2	0	14	5	23	0.6%	J5B J2B J1B
E02005685 : South Northamptonshire 005	2	0	0	19	1	22	0.6%	J5D J12A
E02003658 : Aylesbury Vale 007	10	0	2	7	0	19	0.5%	J6B J4A J3C
E02005701 : Wellingborough 010	3	2	1	9	1	16	0.4%	J5A J18A J17A J16A J15A
E02003607 : Central Bedfordshire 009	2	4	0	7	2	15	0.4%	J5A J18A J17A J16A J15A
E02003641 : Central Bedfordshire 023	1	1	1	11	1	15	0.4%	J6B J4A J3B
E02005677 : Northampton 028	2	1	0	11	0	14	0.4%	J5A J18A J17A J16A J15B
E02005680 : Northampton 031	2	3	0	8	1	14	0.4%	J5A J18A J17A J16A J15B
E02005687 : South Northamptonshire 007	4	1	2	6	0	13	0.4%	J6C J7D J8C J9D J10D
E02003610 : Central Bedfordshire 012	0	1	1	9	1	12	0.3%	J5A J18A J17A J16A J15A
E02005689 : South Northamptonshire 009	1	3	0	5	2	11	0.3%	J6C J7D J8C J9D J10D
E02003659 : Aylesbury Vale 008	7	0	0	3	0	10	0.3%	J6C J7C
E02005679 : Northampton 030	3	0	0	4	2	9	0.2%	J5A J18A J17A J16A J15B
E02005690 : South Northamptonshire 010	1	5	0	3	0	9	0.2%	J6C J7D J8C J9D J10D
E02003617 : Bedford 002	0	2	0	7	0	9	0.2%	J5A J18A J17A J16A J15A
E02003614 : Central Bedfordshire 016	2	2	1	4	0	9	0.2%	J5B J2B J1B and J5A J18A J17A J16A J15A
E02003615 : Central Bedfordshire 017	0	1	1	5	2	9	0.2%	J5A J18A J17A J16A J15B
E02003642 : Central Bedfordshire 025	0	1	0	4	4	9	0.2%	J6B J4A J3B
E02003648 : Central Bedfordshire 030	4	2	1	2	0	9	0.2%	J6B J4A J3B and J5A J18A J17A J16A J15A
E02003670 : Aylesbury Vale 019	3	1	0	5	0	9	0.2%	J6C J7C
E02005682 : South Northamptonshire 002	2	2	0	4	0	8	0.2%	J5A J18A J17A J16A J15A
E02003633 : Bedford 018	0	1	0	5	2	8	0.2%	J5A J18A J17A J16A J15A
E02003634 : Bedford 019	2	1	0	3	2	8	0.2%	J5A J18A J17A J16A J15A
E02003259 : Luton 002	4	1	0	3	0	8	0.2%	J6B J4A J3B and J5A J18A J17A J16A J15B
E02003275 : Luton 018	0	8	0	0	0	8	0.2%	J6B J4A J3B and J5A J18A J17A J16A J15B
E02003278 : Luton 021	0	6	0	1	1	8	0.2%	J6B J4A J3B and J5A J18A J17A J16A J15B
E02003664 : Aylesbury Vale 013	5	3	0	0	0	8	0.2%	J6C J7C
E02003668 : Aylesbury Vale 017	4	0	0	4	0	8	0.2%	J6B J4A J3C
E02005660 : Northampton 011	1	2	0	3	1	7	0.2%	J5A J18A J17A J16A J15B
E02005678 : Northampton 029	1	1	0	3	2	7	0.2%	J5A J18A J17A J16A J15B
E02005699 : Wellingborough 008	0	3	0	4	0	7	0.2%	J5A J18A J17A J16A J15A
E02003613 : Central Bedfordshire 015	2	1	1	2	1	7	0.2%	J5A J18A J17A J16A J15A
E02003276 : Luton 019	0	4	0	3	0	7	0.2%	J6B J4A J3B and J5A J18A J17A J16A J15B
E02004874 : Dacorum 019	0	0	0	7	0	7	0.2%	J6B J4A J3B
E02003662 : Aylesbury Vale 011	4	0	0	2	1	7	0.2%	J6C J7C
E02003672 : Aylesbury Vale 021	2	1	2	2	0	7	0.2%	J6B J4A J3B
E02005931 : Cherwell 011	2	1	0	4	0	7	0.2%	J6C J7D J8C J9D J10D
E02005695 : Wellingborough 004	0	3	0	3	0	6	0.2%	J5A J18A J17A J16A J15A
E02003618 : Bedford 003	0	1	0	4	1	6	0.2%	J5A J18A J17A J16A J15A
E02003606 : Central Bedfordshire 008	1	1	0	1	3	6	0.2%	J5A J18A J17A J16A J15A
E02003647 : Central Bedfordshire 029	1	2	0	2	1	6	0.2%	J6B J4A J3B and
E02003266 : Luton 009	0	2	0	1	3	6	0.2%	J6B J4A J3B
E02005934 : Cherwell 014	0	2	0	3	1	6	0.2%	J6C J7D J8C J9D J10D
						3,660	100.0%	

Percentages	Total	%
J5A J18B	198	5%
J5A J18A J17B	112	3%
J5A J18A J17D J14A	182	5%
J5A J18A J17A J16A J15A	612	17%
J5A J18A J17A J16A J15C	239	7%
J5A J18D J13D	84	2%
J5A J18A J17A J16A J15B	82.5	2%
J5B J2B J1A	208	6%
J5B J2B J1B	194.5	5%
J5B J2B J1C	104	3%
J5A J18D	84	2%
J5D J12A	649	18%
J6B J4A	57	2%
J6B J4A J3B	204	6%
J6B J4A J3C	80	2%
J6C J7D J8C J9D J10C	64	2%
J6C J7D J8C J9D J10D	193	5%
J6C J7C	34	0
J6C J7D J8B	57	2%
J5D J12B J13D	43	1%
J5D	84	2%
J5B	12	0%
J5D J12B	84	2%
	3,660	100%

In order to protect against disclosure of personal information, records have been swapped between different geographic areas. Some counts will be affected, particularly small counts at the lowest geographies.

WU03EW - Location of usual residence and place of work by method of travel to work (MSOA level)
ONS Crown Copyright Reserved [from Nomis on 8 April 2020]
Population : All usual residents aged 16 and over in employment the week before the census
Units : Persons
Date : 2011
Method of travel to work: Driving a car or van

place of work : 2011 super output area - middle layer	E02003654 : Aylesbury Vale 003	E02003486 : Milton Keynes 028	E02003487 : Milton Keynes 029	E02003489 : Milton Keynes 031	E02003490 : Milton Keynes 032	TOTAL	Proportion	New Assignment
E02003472 : Milton Keynes 014	128	497	264	252	120	**1261**	13.10%	J5A J18A J17D J14A and J5A J18A J17A J16A J15D
E02003481 : Milton Keynes 023	66	178	199	193	172	**808**	8.40%	J5B J2B J1B and J5A J18A J17A J16A J15A
E02003475 : Milton Keynes 017	83	240	161	180	130	**794**	8.30%	J5A J18A J17A J16A J15A
E02003488 : Milton Keynes 030	36	99	94	122	99	**450**	4.70%	J5B J2B J1B
E02003476 : Milton Keynes 018	38	138	101	72	52	**401**	4.20%	J5A J18A J17A J16A J15A
E02003489 : Milton Keynes 031	28	62	95	69	49	**303**	3.20%	J5B J2B J1A
E02003468 : Milton Keynes 010	35	76	77	53	31	**272**	2.80%	J5D J12A
E02003477 : Milton Keynes 019	33	109	49	45	30	**266**	2.80%	J5D J12A
E02003480 : Milton Keynes 022	31	82	52	56	45	**266**	2.80%	J5B J2B J1A and J5A J18A J17A J16A J15B
E02003478 : Milton Keynes 020	34	94	55	42	28	**253**	2.60%	J5D J12A
E02003467 : Milton Keynes 009	25	95	40	43	28	**231**	2.40%	J5A J18A J17A J16A J15A
E02003473 : Milton Keynes 015	30	56	53	54	31	**224**	2.30%	J5D J12A
E02003465 : Milton Keynes 007	30	87	39	38	28	**222**	2.30%	J5A J18A J17A J16A J15A
E02003485 : Milton Keynes 027	8	43	49	41	26	**167**	1.70%	J5A J18A J17B
E02003483 : Milton Keynes 025	13	59	46	25	9	**152**	1.60%	J5A J18D J13D and J5D J12A
E02003482 : Milton Keynes 024	9	32	33	40	29	**143**	1.50%	J5A J18A J17A J16A J15A and J5B J2B J1A
E02003479 : Milton Keynes 021	17	50	34	17	16	**134**	1.40%	J5A J18A J17A J16A J15D
E02003652 : Aylesbury Vale 001	71	23	18	8	9	**129**	1.30%	J6C J7D J8C J9D J10D
E02003486 : Milton Keynes 028	8	63	27	14	12	**124**	1.30%	J5A J18D
E02003654 : Aylesbury Vale 003	66	14	22	14	8	**124**	1.30%	J6C J7D J8B and J6B J4A
E02003605 : Central Bedfordshire 007	20	41	26	20	11	**118**	1.20%	J5A J18A J17A J16A J15A
E02003666 : Aylesbury Vale 015	58	15	10	16	6	**105**	1.10%	J6C J7C
E02003463 : Milton Keynes 005	7	36	28	18	10	**99**	1.00%	J5A J18A J17A J16A J15A
E02003462 : Milton Keynes 004	11	24	18	24	16	**93**	1.00%	J5A J18A J17A J16A J15A
E02003460 : Milton Keynes 002	8	36	15	14	14	**87**	0.90%	J5D J12A
E02003471 : Milton Keynes 013	5	45	17	8	11	**86**	0.90%	J5A J18A J17A J16A J15D
E02003470 : Milton Keynes 012	11	22	22	15	12	**82**	0.90%	J5D J12A
E02003490 : Milton Keynes 032	9	15	10	16	32	**82**	0.90%	J5B J2B J1C
E02003643 : Central Bedfordshire 024	13	22	11	7	25	**78**	0.80%	J6B J4A J3B
E02003487 : Milton Keynes 029	3	14	44	11	3	**75**	0.80%	J5A J18B
E02003466 : Milton Keynes 008	10	8	19	22	11	**70**	0.70%	J5D J12A
E02003657 : Aylesbury Vale 006	27	7	11	12	5	**62**	0.60%	J6B J4A J3C
E02003484 : Milton Keynes 026	4	28	9	10	8	**59**	0.60%	J5A J18A J17D J14A
E02003653 : Aylesbury Vale 002	33	9	3	11	2	**58**	0.60%	J6C J7D J8C J9D J10D
E02005677 : Northampton 028	7	21	10	7	8	**53**	0.60%	J5A J18A J17A J16A J15A
E02003639 : Central Bedfordshire 021	13	7	9	8	16	**53**	0.60%	J6B J4A J3B
E02003655 : Aylesbury Vale 004	30	7	2	10	0	**49**	0.50%	J6C J7D J8C J9D J10D
E02003656 : Aylesbury Vale 005	37	2	0	7	2	**48**	0.50%	J6C J7D J8C J9D J10C
E02003663 : Aylesbury Vale 012	29	8	5	3	0	**45**	0.50%	J6C J7C
E02003474 : Milton Keynes 016	3	15	10	12	3	**43**	0.40%	J5A J18A J17A J16A J15A
E02005678 : Northampton 029	5	19	7	3	7	**41**	0.40%	J5A J18A J17A J16A J15A
E02005688 : South Northamptonshire 008	14	11	8	3	4	**40**	0.40%	J6C J7D J8C J9D J10D
E02003633 : Bedford 018	3	9	6	9	11	**38**	0.40%	J5A J18A J17A J16A J15A
E02003275 : Luton 018	7	11	9	6	5	**38**	0.40%	J6B J4A J3B and J5A J18A J17A J16A J15B
E02003278 : Luton 021	9	16	3	8	2	**38**	0.40%	J6B J4A J3B and J5A J18A J17A J16A J15B
E02003664 : Aylesbury Vale 013	17	10	2	8	1	**38**	0.40%	J6C J7C
E02003644 : Central Bedfordshire 026	7	14	4	7	4	**36**	0.40%	J6B J4A J3B
E02003658 : Aylesbury Vale 007	16	6	5	1	8	**36**	0.40%	J6B J4A J3C
E02004868 : Dacorum 013	11	7	2	10	4	**34**	0.40%	J6B J4A J3B
E02003637 : Central Bedfordshire 019	5	8	3	9	7	**32**	0.30%	J5B J2B J1B
E02003271 : Luton 014	3	14	6	5	3	**31**	0.30%	J6B J4A J3B and J5A J18A J17A J16A J15B
E02005674 : Northampton 025	3	15	4	2	4	**28**	0.30%	J5A J18A J17A J16A J15A
E02003627 : Bedford 012	3	10	3	7	3	**26**	0.30%	J5A J18A J17A J16A J15A
E02003629 : Bedford 014	0	5	2	14	3	**24**	0.20%	J5A J18A J17A J16A J15A
E02003630 : Bedford 015	4	7	4	7	2	**24**	0.20%	J5A J18A J17A J16A J15A
E02003459 : Milton Keynes 001	1	9	5	5	4	**24**	0.20%	J5D J12A
E02005683 : South Northamptonshire 003	0	10	1	9	3	**23**	0.20%	J5D J12B J13D
E02005690 : South Northamptonshire 010	10	8	2	1	2	**23**	0.20%	J6C J7D J8C J9D J10D
E02003659 : Aylesbury Vale 008	3	7	6	7	0	**23**	0.20%	J5A J18A J17A J16A J15A
E02003668 : Aylesbury Vale 017	9	7	2	3	2	**23**	0.20%	J6B J4A J3C
E02000977 : Westminster 018	5	8	4	4	1	**22**	0.20%	J6B J4A J3B and J5A J18A J17A J16A J15B
E02003665 : Aylesbury Vale 014	8	4	0	6	4	**22**	0.20%	J6B J4A J3C
E02003670 : Aylesbury Vale 019	11	3	4	0	4	**22**	0.20%	J6C J7C
E02005685 : South Northamptonshire 005	6	7	1	7	0	**21**	0.20%	J5D J12A
E02003461 : Milton Keynes 003	2	7	4	3	4	**20**	0.20%	J5A J18A J17A J16A J15A
E02003464 : Milton Keynes 006	3	10	4	1	2	**20**	0.20%	J5A J18A J17A J16A J15A
E02005935 : Cherwell 015	5	8	2	5	0	**20**	0.20%	J6C J7D J8C J9D J10D
E02004870 : Dacorum 015	2	4	2	4	7	**19**	0.20%	J6B J4A J3B
E02005933 : Cherwell 013	10	6	0	1	2	**19**	0.20%	J6C J7D J8C J9D J10D
E02003660 : Aylesbury Vale 009	5	1	1	2	8	**17**	0.20%	J6B J4A J3C
E02003710 : Wycombe 015	8	2	1	3	3	**17**	0.20%	J6C J7C
E02005670 : Northampton 021	1	8	3	3	1	**16**	0.20%	J5A J18A J17A J16A J15A
E02003610 : Central Bedfordshire 012	1	6	3	2	4	**16**	0.20%	J5A J18A J17A J16A J15A
E02003647 : Central Bedfordshire 029	1	5	1	4	3	**14**	0.10%	J6B J4A J3B
E02003667 : Aylesbury Vale 016	9	2	1	1	1	**14**	0.10%	J6B J4A J3B
E02003672 : Aylesbury Vale 021	7	5	0	0	2	**14**	0.10%	J6B J4A J3B
E02005939 : Cherwell 019	3	8	3	0	0	**14**	0.10%	J5B J2B J1B and J6C J7D J8C J9D J10D
E02003622 : Bedford 007	0	4	0	3	6	**13**	0.10%	J5A J18A J17A J16A J15A
E02003625 : Bedford 010	1	4	2	4	2	**13**	0.10%	J5A J18A J17A J16A J15A
E02003645 : Central Bedfordshire 027	4	2	2	3	2	**13**	0.10%	J6B J4A J3B
E02003276 : Luton 019	3	3	2	3	2	**13**	0.10%	J6B J4A J3B and J5A J18A J17A J16A J15B
E02003661 : Aylesbury Vale 010	10	0	0	3	0	**13**	0.10%	J6C J7D J8C J9D J10C
E02003675 : Aylesbury Vale 024	9	1	0	0	3	**13**	0.10%	J6B J4A J3B
E02005621 : Daventry 003	1	8	1	2	0	**12**	0.10%	J5D J12A
E02003640 : Central Bedfordshire 022	4	2	2	2	2	**12**	0.10%	J6B J4A J3B
E02003659 : Aylesbury Vale 008	8	2	1	1	0	**12**	0.10%	J6C J7D J8C J9D J10C
E02005924 : Cherwell 004	6	3	0	3	0	**12**	0.10%	J6C J7D J8C J9D J10D
E02005684 : South Northamptonshire 004	1	2	6	1	1	**11**	0.10%	J5D J12A
E02003606 : Central Bedfordshire 008	2	2	3	3	1	**11**	0.10%	J5A J18A J17A J16A J15A
E02004983 : Welwyn Hatfield 004	2	3	2	2	2	**11**	0.10%	J5B J2B J1B
E02003682 : Chiltern 007	3	3	3	1	1	**11**	0.10%	J6B J4A J3B
E02005636 : East Northamptonshire 008	0	3	4	2	1	**10**	0.10%	J5A J18A J17A J16A J15A
E02004859 : Dacorum 004	1	3	2	1	3	**10**	0.10%	J6B J4A J3B
E02004864 : Dacorum 009	2	2	0	6	0	**10**	0.10%	J6B J4A J3B
E02004935 : St Albans 012	2	5	0	1	2	**10**	0.10%	J6B J4A J3B
E02004989 : Welwyn Hatfield 010	0	8	2	0	0	**10**	0.10%	J6B J4A J3B
E02005931 : Cherwell 011	6	1	3	0	0	**10**	0.10%	J6C J7D J8C J9D J10D
E02005936 : Cherwell 016	4	5	0	1	0	**10**	0.10%	J6C J7D J8C J9D J10D
E02000001 : City of London 001	4	1	2	2	0	**9**	0.10%	J6B J4A J3B and J5A J18A J17A J16A J15B
E02005934 : Cherwell 014	7	0	1	1	0	**9**	0.10%	J6C J7D J8C J9D J10D
E02005952 : Oxford 013	3	4	1	1	0	**9**	0.10%	J6C J7D J8C J9D J10D
E02005958 : South Oxfordshire 001	7	1	0	1	0	**9**	0.10%	J6C J7D J8C J9D J10D
E02006530 : Warwick 012	1	3	3	1	0	**8**	0.10%	J6C J7D J8C J9D J10D
E02003619 : Bedford 004	1	2	3	0	2	**8**	0.10%	J5A J18A J17A J16A J15A
E02003613 : Central Bedfordshire 015	2	1	1	3	1	**8**	0.10%	J5A J18A J17A J16A J15A
E02003638 : Central Bedfordshire 020	3	4	0	1	0	**8**	0.10%	J6B J4A J3B
E02003650 : Central Bedfordshire 032	3	3	1	0	1	**8**	0.10%	J6B J4A J3B
E02003273 : Luton 016	0	1	0	7	0	**8**	0.10%	J6B J4A J3B and J5A J18A J17A J16A J15B
E02004976 : Watford 009	4	1	0	0	3	**8**	0.10%	J6B J4A J3B and J5A J18A J17A J16A J15B
E02000974 : Westminster 015	0	4	0	3	1	**8**	0.10%	J6B J4A J3B and J5A J18A J17A J16A J15B
E02000252 : Ealing 015	2	0	5	0	1	**8**	0.10%	J6B J4A J3B and J5A J18A J17A J16A J15B
E02003718 : Wycombe 023	7	1	0	0	0	**8**	0.10%	J6C J7C
E02005945 : Oxford 006	4	2	1	1	0	**8**	0.10%	J6C J7D J8C J9D J10D
E02005960 : South Oxfordshire 003	5	0	0	3	0	**8**	0.10%	J6C J7C
E02005687 : South Northamptonshire 007	2	3	2	0	0	**7**	0.10%	J6C J7D J8C J9D J10D
E02006492 : Rugby 001	1	1	1	3	1	**7**	0.10%	J5A J18A J17A J16A J15A
E02003626 : Bedford 011	0	2	0	0	5	**7**	0.10%	J5A J18A J17A J16A J15A
E02003634 : Bedford 019	0	3	1	3	0	**7**	0.10%	J5A J18A J17A J16A J15A
E02003611 : Central Bedfordshire 013	0	3	0	2	2	**7**	0.10%	J5A J18A J17A J16A J15A
E02003259 : Luton 002	0	4	0	2	1	**7**	0.10%	J6B J4A J3B and J5A J18A J17A J16A J15B
E02003270 : Luton 013	5	1	0	0	1	**7**	0.10%	J6B J4A J3B and J5A J18A J17A J16A J15B
E02003272 : Luton 015	2	1	2	2	0	**7**	0.10%	J6B J4A J3B and J5A J18A J17A J16A J15B
E02004978 : Watford 011	0	2	2	1	2	**7**	0.10%	J6B J4A J3B and J5A J18A J17A J16A J15B
E02000524 : Hillingdon 031	0	3	1	3	0	**7**	0.10%	J6B J4A J3B and J5A J18A J17A J16A J15B
E02003408 : Slough 002	1	0	2	3	1	**7**	0.10%	J6C J7D J8C J9D J10D
E02003673 : Aylesbury Vale 022	5	2	0	0	0	**7**	0.10%	J6C J7C
E02005947 : Oxford 008	1	1	3	2	0	**7**	0.10%	J6C J7D J8C J9D J10D
E02005667 : Northampton 018	1	3	1	0	1	**6**	0.10%	J5A J18A J17A J16A J15A
E02003618 : Bedford 003	1	1	1	2	1	**6**	0.10%	J5A J18A J17A J16A J15A
E02003624 : Bedford 009	0	2	0	2	2	**6**	0.10%	J5A J18A J17A J16A J15A
E02003635 : Bedford 020	1	0	1	3	1	**6**	0.10%	J5A J18A J17A J16A J15A
E02003646 : Central Bedfordshire 028	0	0	3	1	2	**6**	0.10%	J6B J4A J3B
E02004857 : Dacorum 002	2	1	2	0	1	**6**	0.10%	J6B J4A J3B
E02004877 : Dacorum 022	2	2	1	0	1	**6**	0.10%	J6B J4A J3B
E02004966 : Three Rivers 011	2	2	0	0	2	**6**	0.10%	J6B J4A J3B and J5A J18A J17A J16A J15B
E02003669 : Aylesbury Vale 018	5	0	1	0	0	**6**	0.10%	J6C J7C
						9613	100%	

New Percentages	Total	%
J5A J18B	75	1%
J5A J18A J17B	167	2%
J5A J18A J17D J14A	689.5	7%
J5A J18A J17A J16A J15A	2920.5	30%
J5A J18A J17A J16A J15D	850.5	9%
J5A J18D J13D	76	1%
J5A J18A J17A J16A J15B	245	3%
J5B J2B J1B	904	9%
J5B J2B J1A	477.2	5%
J5B J2B J1C	82	1%
J5D J12A	1322	14%
J5A J18D	62	1%
J6B J4A	62	1%
J6B J4A J3B	497	5%
J6B J4A J3C	160	2%
J6C J7C	256	3%
J6C J7D J8C J9D J10C	73	1%
J6C J7D J8C J9D J10D	441	5%
J5D J12B J13D	23	0%
J6C J7D J8B	62	1%
J5B	30.3	0%
J5D J12B	76	1%
J5D	62	1%
Total	9613	100%

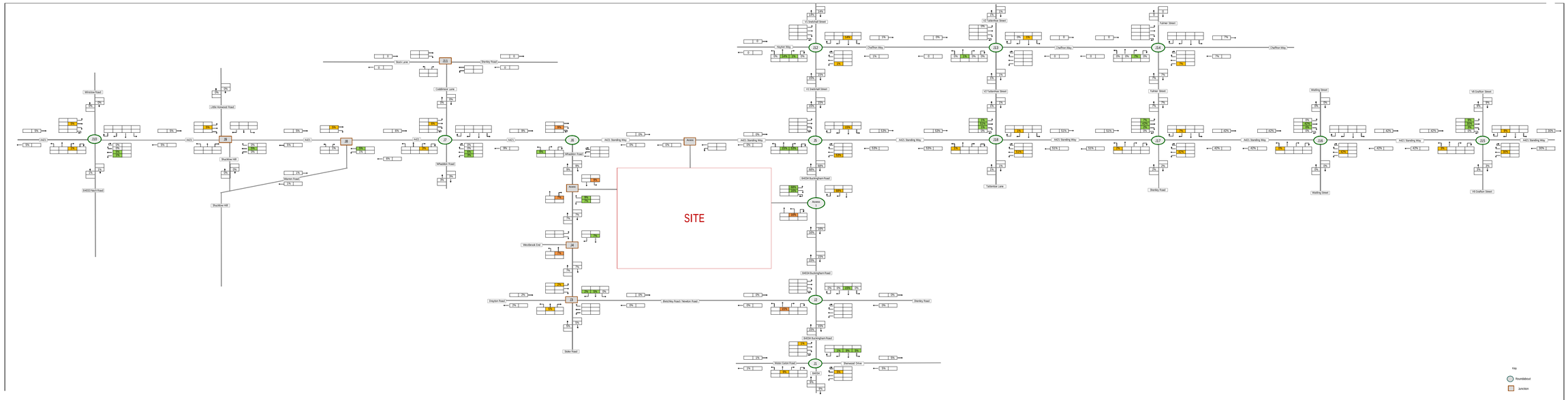

WSP
1 Lochrin Square Fount Lane, Scotland
0131 225 7
E: Scotland@wsp.com

SWMC
Residential Trip Distribution

Drawn by	AR	Checked by	JS
Job No.			
Date	4.10.21		

Approved by JS

Network Diagram & Matrices

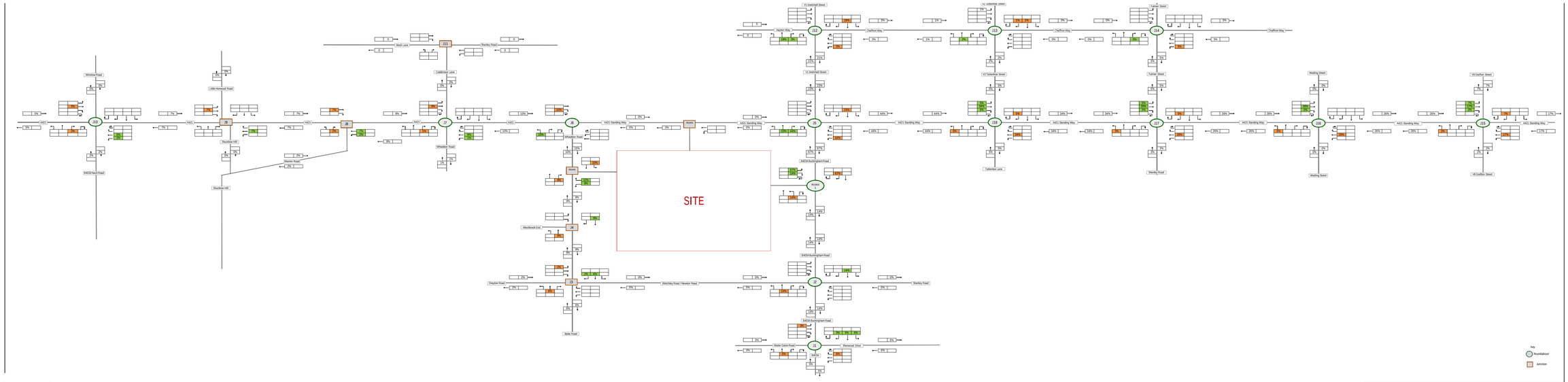

wsp
5 Lochrin Square, Cross Lanes, Scotland
EH3 9GL
T: 0141 214 4400

SWMK
Employment Trip Distribution

Drawn by:	MP	Checked by:	JS
Approved by:	JS
Scale:	
Date:	14.08.21

Network Diagram & Matrices

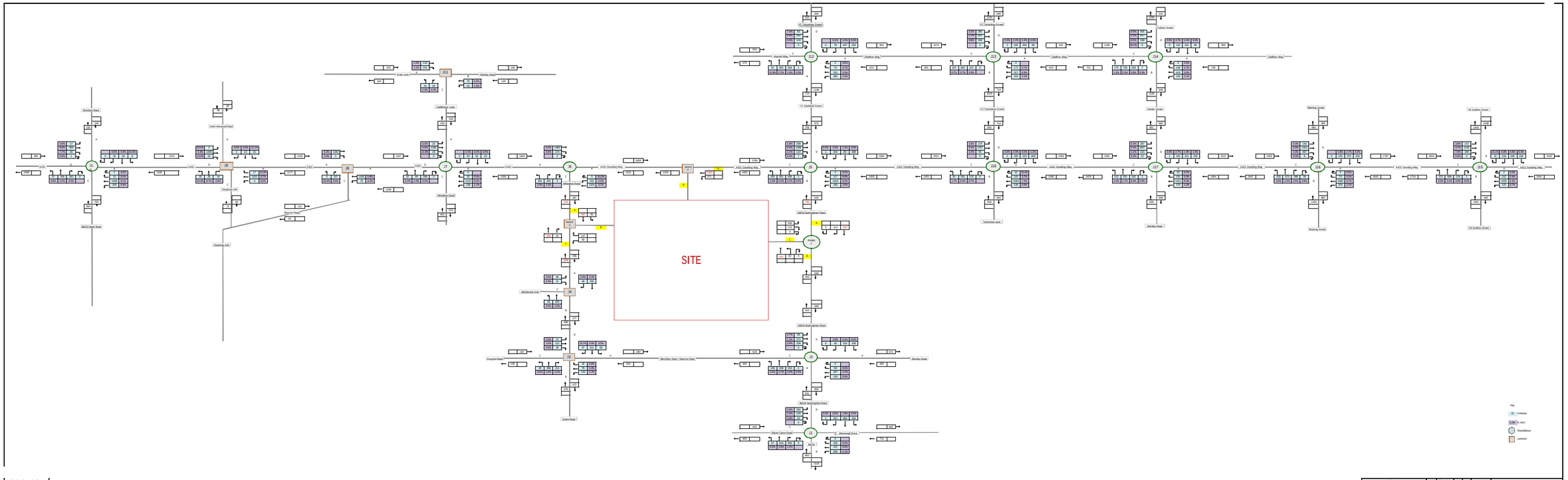

WSP
2 Cumber Square, Cross Lanes, Guildford
GU1 3QE
T: 01483 68 400

Do Something 1 AM

Client no.		Drawn by	Approved by
Job no.			
Scale			

Network Diagram & Attributes

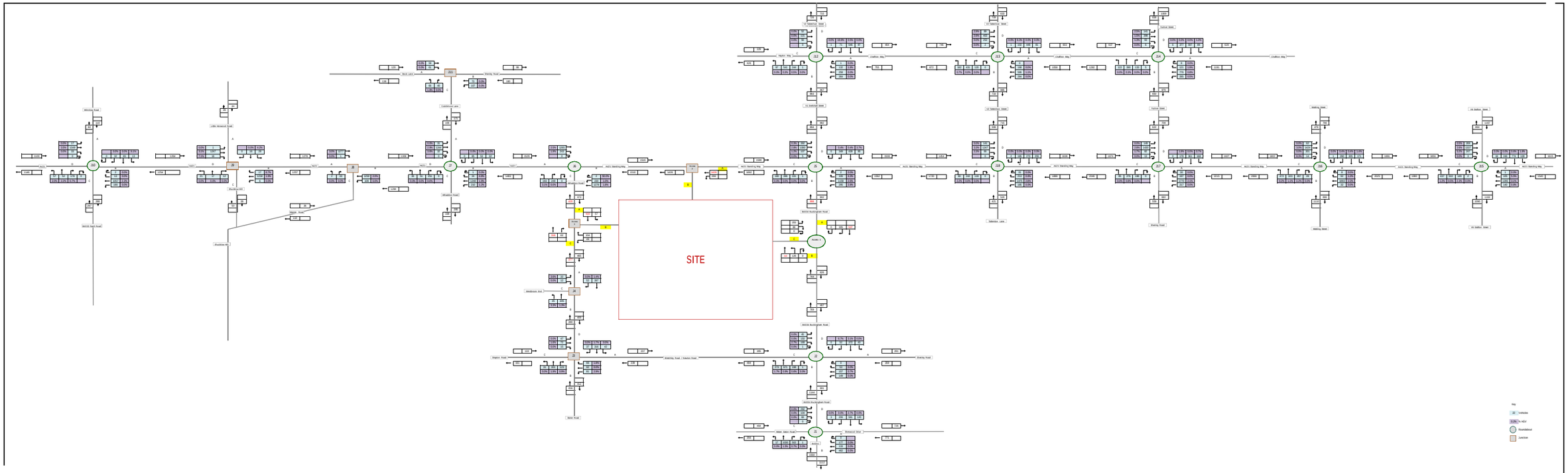

wsp
2 Lumsden Square, Cross Lanes, Guildford
GU5 0QB
+44 (0) 1483 558 000

Do Something 1 PM

Status Code		Original Size	Scale/Level Size
JOB No.			
Date			

Network Diagram & Matrices

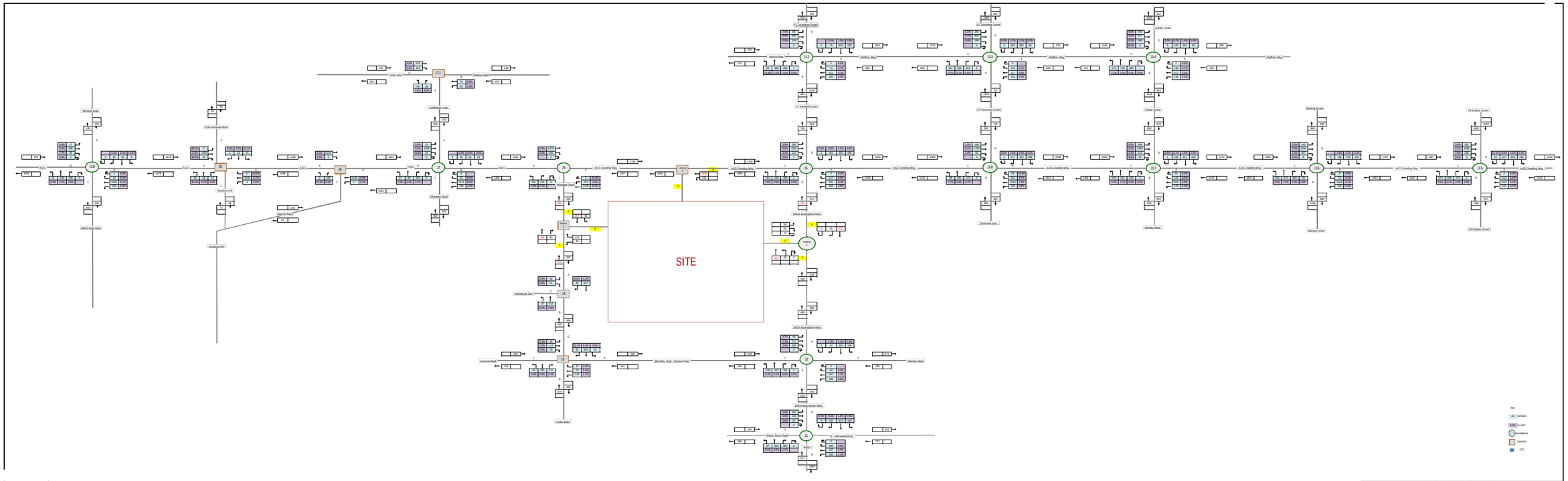

WSP
2 London Square Cross Lanes Guildford
GU1 1UN
T: 01483 68 400

Do Something 2 AM

Client no.		Revision no.	Reference no.
Job no.			
Date			
Network Diagram & Matrices			

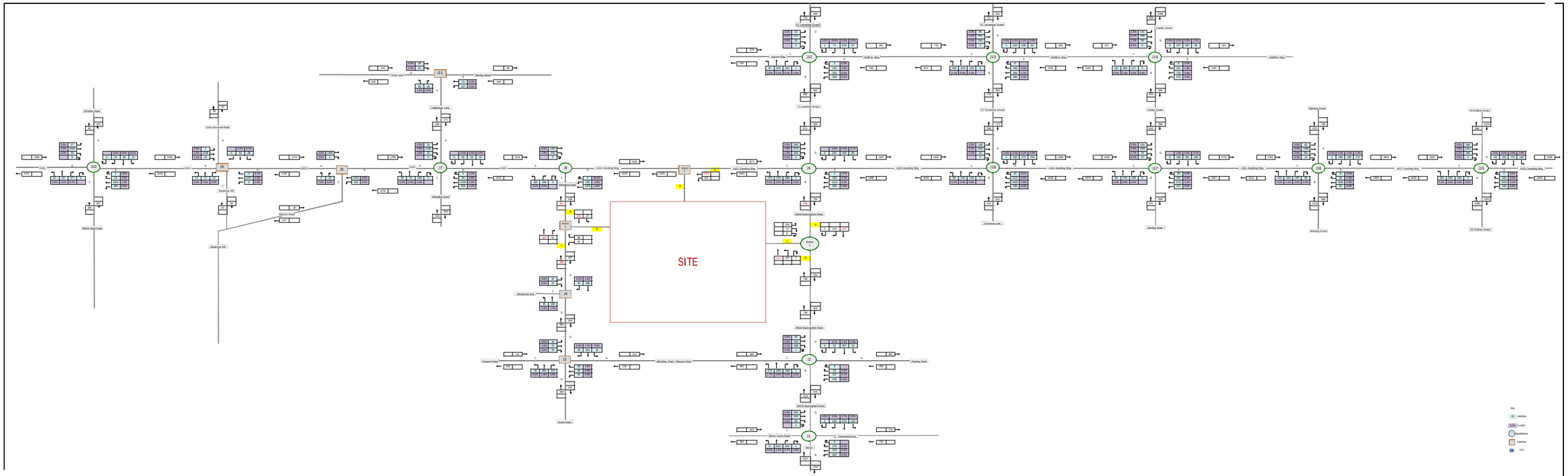

wsp
2 London Square Cross Lanes Guildford
GU1 1UN
T: +44 (0)1483 302

Client no.		Drawing no.	Revision no.
Job no.			
Date			
Network Diagram & Matrices			

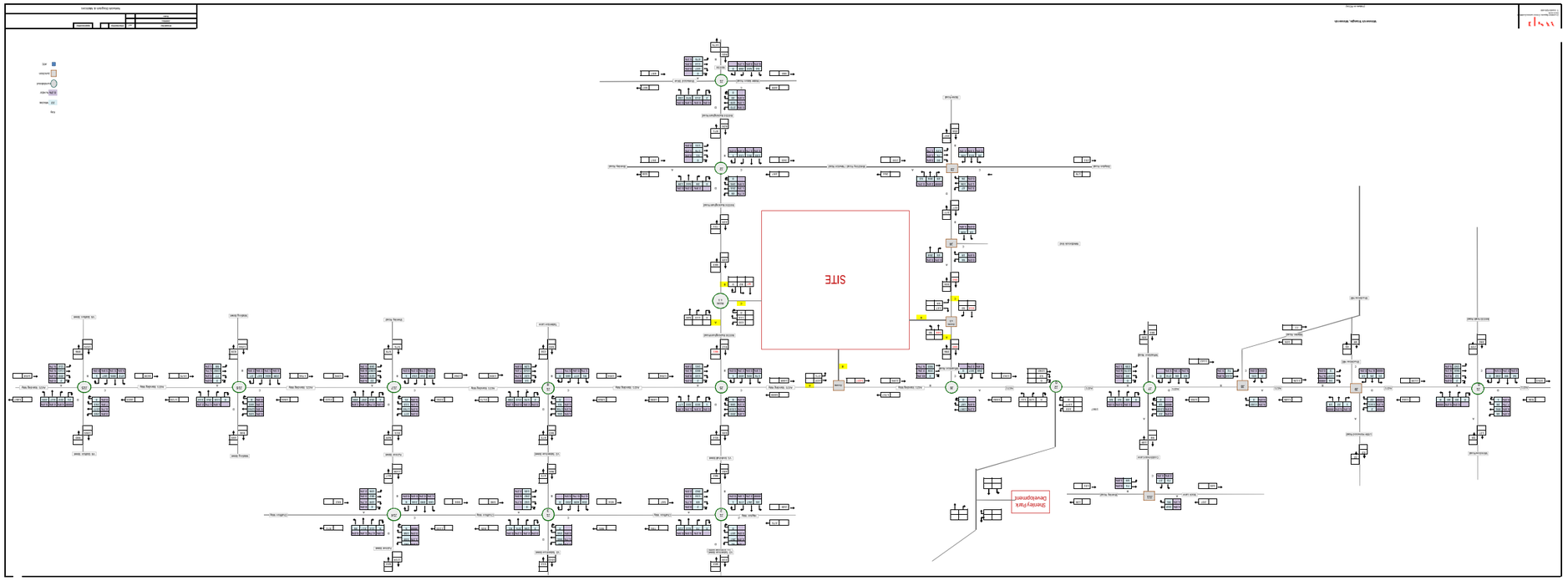

Shenley Park Development
SITE
Key
22 Vehicles
0.2% % HGV
Roundabout
Junction
ATC

Winnersh Triangle, Winnersh

(Values in PCUs)

Drawn by:		Checked by:		Approved by:	
Job No:					
Date:					

Network Diagram & Matrices

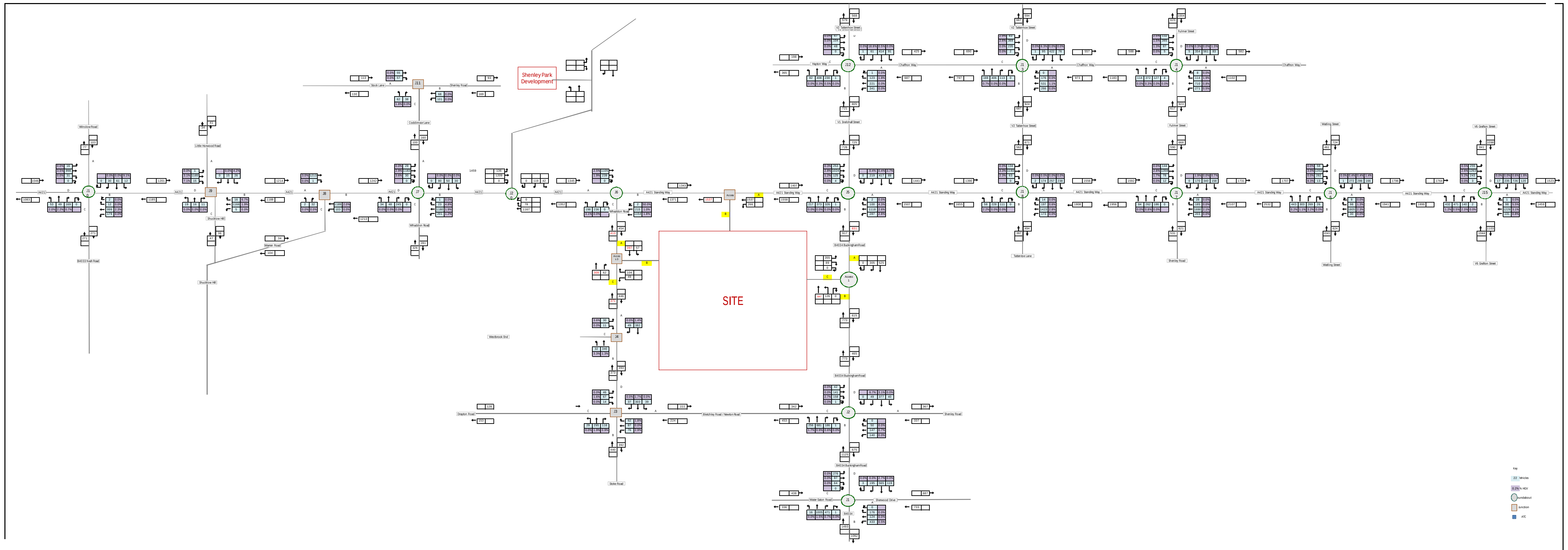

Winnersh Triangle, Winnersh

(Values in PCUs)

Drawn by: WF | Checked by: | Approved by:

Job No.:

Date:

Network Diagram & Matrices

Appendix H

TRAFFIC FLOW COMPARISON

Public

JUNCTION FLOW COMPARISON

AM

Junction	Total Flows		Diff	Arm A		Diff	Arm B		Diff	Arm C		Diff	Arm D		Diff	Notes
	ATC	MCC		ATC	MCC		ATC	MCC		ATC	MCC		ATC	MCC		
Junction 1 – Sherwood Drive/Water Eaton Road/Buckingham Road Roundabout	2566	2827	-261	570	608	-38	683	814	-131	374	363	11	939	1042	-103	MCC Higher
Junction 2 - Shenley Road/Newton Road/B4034 Roundabout	1431	1721	-290	304	331	-27	450	465	-15	240	460	-220	437	465	-28	MCC Higher
Junction 3 - Bletchley Road/Stoke Road/Drayton Road/Whaddon Road	951	1016	-65	204	213	-9	367	387	-20	140	152	-12	240	264	-24	MCC Higher
Junction 4 - Whaddon Road/Westbrook End Priority Junction	625	692	-67	263	288	-25	304	335	-31	58	69	-11	0	0	0	MCC Higher
Junction 5 – Tattenhoe Roundabout	3451	3426	25	954	910	44	402	407	-5	1467	1450	17	628	659	-31	ATC Higher
Junction 6 - Bottledump Roundabout	2758	2858	-100	1302	1380	-78	1106	1104	2	350	374	-24	0	0	0	MCC Higher
Junction 7 - Whaddon Crossroads Roundabout	2622	2745	-123	134	138	-4	1098	1135	-37	331	341	-10	1059	1131	-72	MCC Higher
Junction 8 - Warren Road Priority Junction	1997	2156	-159	995	1047	-52	922	1019	-97	80	90	-10	0	0	0	MCC Higher
Junction 9 - Shucklow Hill Priority Junction	2002	2102	-100	37	39	-2	905	971	-66	63	64	-1	997	1028	-31	MCC Higher
Junction 10 – A421 Nash Road/Winslow Road	2132	2246	-114	89	91	-2	918	983	-65	335	345	-10	790	827	-37	MCC Higher
Junction 11 - Stock Lane/Shenley Road/Coddimoor Lane Priority Junction	370	404	-34	177	192	-15	105	121	-16	88	91	-3	0	0	0	MCC Higher
Junction 12 - Kingsmead Roundabout	1762	1775	-13	443	447	-4	482	489	-7	110	114	-4	727	725	2	MCC Higher
Junction 13 - Westcroft Roundabout	2434	2634	-200	514	500	14	767	874	-107	658	712	-54	495	548	-53	MCC Higher
Junction 14 – Furzton Roundabout	2502	2634	-132	518	500	18	951	874	77	577	712	-135	456	548	-92	MCC Higher
Junction 15 – Bleak Hall Roundabout	4792	4473	319	1177	1243	-66	1145	1194	-49	1261	1166	95	1209	870	339	ATC Higher
Junction 16 – Elfield Park Roundabout	4366	4281	85	1202	1277	-75	1078	1163	-85	1661	1406	255	425	435	-10	ATC Higher
Junction 17 - Emerson Roundabout	4113	3930	183	1456	1122	334	514	515	-1	1596	1725	-129	547	568	-21	ATC Higher
Junction 18 - Windmill Hill Roundabout	3318	3479	-161	895	996	-101	486	466	20	1387	1436	-49	550	581	-31	MCC Higher

JUNCTION FLOW COMPARISON

PM

Junction	Total Flows		Diff	Arm A		Diff	Arm B		Diff	Arm C		Diff	Arm D		Diff	Notes
	ATC	MCC		ATC	MCC		ATC	MCC		ATC	MCC		ATC	MCC		
Junction 1 – Sherwood Drive/Water Eaton Road/Buckingham Road Roundabout	2507	2964	-457	570	626	-56	924	1248	-324	331	394	-63	682	696	-14	MCC Higher
Junction 2 - Shenley Road/Newton Road/B4034 Roundabout	1627	1784	-157	312	311	1	804	846	-42	191	316	-125	320	311	9	MCC Higher
Junction 3 - Bletchley Road/Stoke Road/Drayton Road/Whaddon Road	916	959	-43	205	207	-2	331	350	-19	103	102	1	277	300	-23	MCC Higher
Junction 4 - Whaddon Road/Westbrook End Priority Junction	641	643	-2	314	341	-27	287	264	23	40	38	2	0	0	0	MCC Higher
Junction 5 – Tattenhoe Roundabout	3378	3324	54	1119	982	137	420	441	-21	1221	1280	-59	618	621	-3	ATC Higher
Junction 6 - Bottledump Roundabout	2610	2795	-185	1138	1227	-89	1214	1287	-73	258	281	-23	0	0	0	MCC Higher
Junction 7 - Whaddon Crossroads Roundabout	2519	2726	-207	136	148	-12	1169	1230	-61	243	270	-27	971	1078	-107	MCC Higher
Junction 8 - Warren Road Priority Junction	2043	2224	-181	975	1057	-82	1040	1141	-101	28	26	2	0	0	0	MCC Higher
Junction 9 - Shucklow Hill Priority Junction	2093	2178	-85	27	38	-11	997	1052	-55	42	43	-1	1027	1045	-18	MCC Higher
Junction 10 – A421 Nash Road/Winslow Road	2223	2304	-81	89	95	-6	1050	1057	-7	223	242	-19	861	910	-49	MCC Higher
Junction 11 - Stock Lane/Shenley Road/Coddimoor Lane Priority Junction	325	352	-27	95	104	-9	146	156	-10	84	92	-8	0	0	0	MCC Higher
Junction 12 - Kingsmead Roundabout	1701	1591	110	583	460	123	600	600	0	49	55	-6	469	476	-7	MCC Higher
Junction 13 - Westcroft Roundabout	2397	2454	-57	768	757	11	530	608	-78	578	555	23	521	534	-13	MCC Higher
Junction 14 – Furzton Roundabout	2644	2756	-112	807	827	-20	529	526	3	435	477	-42	873	926	-53	MCC Higher
Junction 15 – Bleak Hall Roundabout	4119	4400	-281	1153	1124	29	899	908	-9	1331	1419	-88	736	949	-213	MCC Higher
Junction 16 – Elfield Park Roundabout	4005	4444	-439	1422	1446	-24	586	962	-376	1394	1372	22	603	664	-61	MCC Higher
Junction 17 - Emerson Roundabout	4197	3862	335	2003	1610	393	452	472	-20	1179	1217	-38	563	563	0	ATC Higher
Junction 18 - Windmill Hill Roundabout	3270	3229	41	1249	1264	-15	373	358	15	1054	1007	47	594	600	-6	ATC Higher

Appendix I

JUNCTION MODELLING RESULTS

Public

Junctions 9

PICADY 9 - Priority Intersection Module

Version: 9.5.1.7462
© Copyright TRL Limited, 2019

For sales and distribution information, program advice and maintenance, contact TRL:
+44 (0)1344 379777 software@trl.co.uk www.trlsoftware.co.uk

The users of this computer program for the solution of an engineering problem are in no way relieved of their responsibility for the correctness of the solution

Filename: J3 - Bletchley Road Stoke Road Drayton Road Whaddon Road.j9
Path: \\uk.wspgroup.com\central data\Projects\700694xx\70069442 - SWMK - 2020\03 WIP\TP Transport Planning\Incoming\iCRC\200821 - Junction and Mitigation Modelling BC Only\J3
Report generation date: 28/08/2020 14:53:25

»2020 Base, AM
»2020 Base, PM
»2033 Base, AM
»2033 Base, PM
»2033 Base + CD + D, AM
»2033 Base + CD + D, PM
»2033 Base + CD + D with TP, AM
»2033 Base + CD + D with TP, PM
»2033 Base + CD + D - ST, AM
»2033 Base + CD + D - ST, PM
»2033 Base + CD + SP (ST), AM
»2033 Base + CD + SP (ST), PM

Summary of junction performance

	AM					PM				
	Set ID	Queue (Veh)	Delay (s)	RFC	LOS	Set ID	Queue (Veh)	Delay (s)	RFC	LOS
2020 Base										
Stream B-ACD	D1	13.6	118.11	0.99	F	D2	6.3	62.75	0.89	F
Stream A-BCD		0.1	5.74	0.06	A		0.2	6.03	0.12	A
Stream D-ABC		2.5	27.53	0.72	D		2.1	23.88	0.69	C
Stream C-ABD		0.1	5.83	0.05	A		0.0	5.92	0.03	A
2033 Base										
Stream B-ACD	D13	46.1	361.09	1.18	F	D14	26.7	205.46	1.08	F
Stream A-BCD		0.1	5.69	0.08	A		0.2	6.05	0.14	A
Stream D-ABC		6.0	58.40	0.88	F		4.2	41.89	0.83	E
Stream C-ABD		0.1	5.79	0.06	A		0.0	5.93	0.03	A
2033 Base + CD + D										
Stream B-ACD	D15	69.5	582.77	1.28	F	D16	51.6	414.19	1.21	F
Stream A-BCD		0.1	5.71	0.08	A		0.2	6.09	0.14	A
Stream D-ABC		19.7	153.90	1.04	F		9.6	84.82	0.95	F
Stream C-ABD		0.1	5.74	0.06	A		0.0	5.83	0.03	A
2033 Base + CD + D with TP										
Stream B-ACD	D17	65.0	545.92	1.27	F	D18	46.8	367.91	1.19	F
Stream A-BCD		0.1	5.71	0.08	A		0.2	6.08	0.14	A
Stream D-ABC		16.2	131.96	1.02	F		8.1	73.88	0.93	F
Stream C-ABD		0.1	5.75	0.06	A		0.0	5.85	0.03	A
2033 Base + CD + D - ST										
Stream B-ACD	D19	75.1	627.66	1.30	F	D20	58.3	478.89	1.24	F
Stream A-BCD		0.1	5.71	0.08	A		0.2	6.09	0.14	A
Stream D-ABC		27.3	200.15	1.09	F		11.2	95.62	0.97	F
Stream C-ABD		0.1	5.73	0.06	A		0.0	5.82	0.03	A
2033 Base + CD + SP (ST)										
Stream B-ACD	D21	49.5	394.88	1.20	F	D22	32.0	238.98	1.11	F
Stream A-BCD		0.1	5.69	0.08	A		0.2	6.06	0.14	A
Stream D-ABC		8.2	76.33	0.93	F		4.7	45.73	0.84	E
Stream C-ABD		0.1	5.78	0.06	A		0.0	5.91	0.03	A

Values shown are the highest values encountered over all time segments. Delay is the maximum value of average delay per arriving vehicle.

File summary

File Description

Title	Bletchley Road/ Stoke Road/ Drayton Road/ Whaddon Road
Location	51°58'28.41"N, 0°45'57.62"W
Site number	3
Date	04/12/2015
Version	
Status	(new file)
Identifier	
Client	
Jobnumber	
Enumerator	fsuarez
Description	

Units

Distance units	Speed units	Traffic units input	Traffic units results	Flow units	Average delay units	Total delay units	Rate of delay units
m	kph	Veh	Veh	perHour	s	-Min	perMin

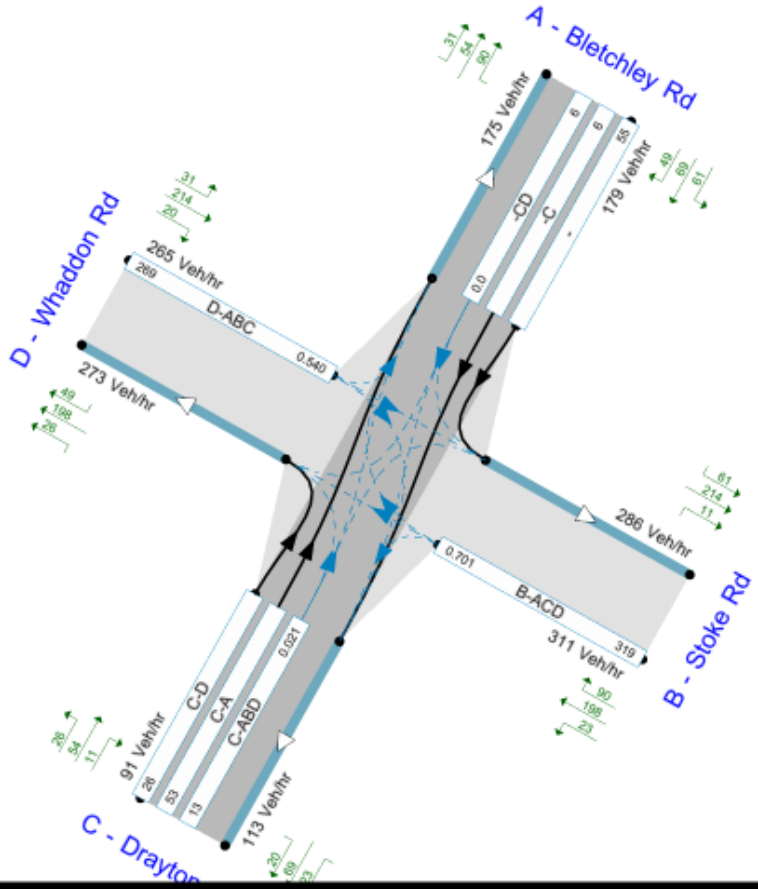

[redacted]

The junction diagram reflects the last run of Junctions.

Analysis Options

Vehicle length (m)	Calculate Queue Percentiles	Calculate detailed queueing delay	Calculate residual capacity	RFC Threshold	Average Delay threshold (s)	Queue threshold (PCU)
5.75				0.85	36.00	20.00

Demand Set Summary

ID	Scenario name	Time Period name	Traffic profile type	Start time (HH:mm)	Finish time (HH:mm)	Time segment length (min)	Run automatically
D1	2020 Base	AM	ONE HOUR	07:30	09:00	15	✓
D2	2020 Base	PM	ONE HOUR	16:45	18:15	15	✓
D3	2026 Base	AM	ONE HOUR	07:30	09:00	15	✓
D4	2026 Base	PM	ONE HOUR	16:45	18:15	15	✓
D5	2026 Base + CD + D	AM	ONE HOUR	07:30	09:00	15	✓
D6	2026 Base + CD + D	PM	ONE HOUR	16:45	18:15	15	✓
D7	2026 Base + CD + D with TP	AM	ONE HOUR	07:30	09:00	15	✓
D8	2026 Base + CD + D with TP	PM	ONE HOUR	16:45	18:15	15	✓
D9	2026 Base + CD + D - ST	AM	ONE HOUR	07:30	09:00	15	✓
D10	2026 Base + CD + D - ST	PM	ONE HOUR	16:45	18:15	15	✓
D11	2026 Base + CD + SP (ST)	AM	ONE HOUR	07:30	09:00	15	✓
D12	2026 Base + CD + SP (ST)	PM	ONE HOUR	16:45	18:15	15	✓
D13	2033 Base	AM	ONE HOUR	07:30	09:00	15	✓
D14	2033 Base	PM	ONE HOUR	16:45	18:15	15	✓
D15	2033 Base + CD + D	AM	ONE HOUR	07:30	09:00	15	✓
D16	2033 Base + CD + D	PM	ONE HOUR	16:45	18:15	15	✓
D17	2033 Base + CD + D with TP	AM	ONE HOUR	07:30	09:00	15	✓
D18	2033 Base + CD + D with TP	PM	ONE HOUR	16:45	18:15	15	✓
D19	2033 Base + CD + D - ST	AM	ONE HOUR	07:30	09:00	15	✓
D20	2033 Base + CD + D - ST	PM	ONE HOUR	16:45	18:15	15	✓
D21	2033 Base + CD + SP (ST)	AM	ONE HOUR	07:30	09:00	15	✓
D22	2033 Base + CD + SP (ST)	PM	ONE HOUR	16:45	18:15	15	✓

Analysis Set Details

ID	Include in report	Use specific Demand Set(s)	Specific Demand Set(s)	Network flow scaling factor (%)	Network capacity scaling factor (%)
A1	✓	✓	D1,D2,D13,D14,D15,D16,D17,D18,D19,D20,D21,D22	100.000	100.000

2020 Base, AM

Data Errors and Warnings

No errors or warnings

Junction Network

Junctions

Junction	Name	Junction type	Major road direction	Use circulating lanes	Junction Delay (s)	Junction LOS
J3	Bletchley Road/ Stoke Road/ Drayton Road/ Whaddon Road	Crossroads	Two-way		51.27	F

Junction Network Options

Driving side	Lighting
Left	Normal/unknown

Arms

Arms

Arm	Name	Description	Arm type
A	Bletchley Rd		Major
B	Stoke Rd		Minor
C	Drayton Rd		Major
D	Whaddon Rd		Minor

Major Arm Geometry

Arm	Width of carriageway (m)	Has kerbed central reserve	Has right turn bay	Visibility for right turn (m)	Blocks?	Blocking queue (PCU)
A - Bletchley Rd	6.00			59.0	✓	0.00
C - Drayton Rd	6.00			79.3	✓	0.00

Geometries for Arm C are measured opposite Arm B. Geometries for Arm A (if relevant) are measured opposite Arm D.

Minor Arm Geometry

Arm	Minor arm type	Lane width (m)	Visibility to left (m)	Visibility to right (m)
B - Stoke Rd	One lane	3.40	16	41
D - Whaddon Rd	One lane	3.98	30	33

Slope / Intercept / Capacity

Priority Intersection Slopes and Intercepts

Stream	Intercept (Veh/hr)	Slope for A-B	Slope for A-C	Slope for A-D	Slope for B-A	Slope for B-C	Slope for B-D	Slope for C-A	Slope for C-B	Slope for C-D	Slope for D-A	Slope for D-B	Slope for D-C
A-D	608	-	-	-	-	-	-	0.236	0.337	0.236	-	-	-
B-A	523	0.095	0.241	0.241	-	-	-	0.151	0.344	-	0.241	0.241	0.120
B-C	676	0.104	0.262	-	-	-	-	-	-	-	-	-	-
B-D, nearside lane	523	0.095	0.241	0.241	-	-	-	0.151	0.344	0.151	-	-	-
B-D, offside lane	523	0.095	0.241	0.241	-	-	-	0.151	0.344	0.151	-	-	-
C-B	620	0.240	0.240	0.343	-	-	-	-	-	-	-	-	-
D-A	708	-	-	-	-	-	-	0.274	-	0.109	-	-	-
D-B, nearside lane	553	0.160	0.160	0.364	-	-	-	0.255	0.255	0.101	-	-	-
D-B, offside lane	553	0.160	0.160	0.364	-	-	-	0.255	0.255	0.101	-	-	-
D-C	553	-	0.160	0.364	0.127	0.255	0.255	0.255	0.255	0.101	-	-	-

The slopes and intercepts shown above do NOT include any corrections or adjustments.

Streams may be combined, in which case capacity will be adjusted.

Values are shown for the first time segment only; they may differ for subsequent time segments.

Traffic Demand

Demand Set Details

ID	Scenario name	Time Period name	Traffic profile type	Start time (HH:mm)	Finish time (HH:mm)	Time segment length (min)	Run automatically
D1	2020 Base	AM	ONE HOUR	07:30	09:00	15	✓

Vehicle mix varies over time	Vehicle mix varies over turn	Vehicle mix varies over entry	Vehicle mix source	PCU Factor for a HV (PCU)
✓	✓	✓	HV Percentages	2.00

Demand overview (Traffic)

Arm	Linked arm	Profile type	Use O-D data	Average Demand (Veh/hr)	Scaling Factor (%)
A - Bletchley Rd		ONE HOUR	✓	213	100.000
B - Stoke Rd		ONE HOUR	✓	387	100.000
C - Drayton Rd		ONE HOUR	✓	152	100.000
D - Whaddon Rd		ONE HOUR	✓	304	100.000

Origin-Destination Data

Demand (Veh/hr)

		To			
		A - Bletchley Rd	B - Stoke Rd	C - Drayton Rd	D - Whaddon Rd
From	A - Bletchley Rd	0	116	69	28
	B - Stoke Rd	97	0	26	264
	C - Drayton Rd	98	24	0	30
	D - Whaddon Rd	49	227	28	0

Proportions

		To			
		A - Bletchley Rd	B - Stoke Rd	C - Drayton Rd	D - Whaddon Rd
From	A - Bletchley Rd	0.00	0.54	0.32	0.13
	B - Stoke Rd	0.25	0.00	0.07	0.68
	C - Drayton Rd	0.64	0.16	0.00	0.20
	D - Whaddon Rd	0.16	0.75	0.09	0.00

Vehicle Mix

07:30 - 07:45

Heavy Vehicle Percentages

		To			
		A - Bletchley Rd	B - Stoke Rd	C - Drayton Rd	D - Whaddon Rd
From	A - Bletchley Rd	0	2	1	4
	B - Stoke Rd	2	0	0	2
	C - Drayton Rd	1	0	0	3
	D - Whaddon Rd	0	3	11	0

Average PCU Per Veh

		To			
		A - Bletchley Rd	B - Stoke Rd	C - Drayton Rd	D - Whaddon Rd
From	A - Bletchley Rd	1.000	1.022	1.014	1.036
	B - Stoke Rd	1.021	1.000	1.000	1.015
	C - Drayton Rd	1.010	1.000	1.000	1.033
	D - Whaddon Rd	1.000	1.026	1.107	1.000

07:45 - 08:00

Heavy Vehicle Percentages

		To			
		A - Bletchley Rd	B - Stoke Rd	C - Drayton Rd	D - Whaddon Rd
From	A - Bletchley Rd	0	0	0	0
	B - Stoke Rd	4	0	15	0
	C - Drayton Rd	2	0	0	8
	D - Whaddon Rd	0	3	7	0

Average PCU Per Veh

		To			
		A - Bletchley Rd	B - Stoke Rd	C - Drayton Rd	D - Whaddon Rd
From	A - Bletchley Rd	1.000	1.000	1.000	1.000
	B - Stoke Rd	1.040	1.000	1.150	1.000
	C - Drayton Rd	1.024	1.000	1.000	1.075
	D - Whaddon Rd	1.000	1.030	1.069	1.000

08:00 - 08:15

Heavy Vehicle Percentages

		To			
		A - Bletchley Rd	B - Stoke Rd	C - Drayton Rd	D - Whaddon Rd
From	A - Bletchley Rd	0	13	6	0
	B - Stoke Rd	0	0	31	0
	C - Drayton Rd	7	0	0	0
	D - Whaddon Rd	6	3	4	0

Average PCU Per Veh

		To			
		A - Bletchley Rd	B - Stoke Rd	C - Drayton Rd	D - Whaddon Rd
From	A - Bletchley Rd	1.000	1.125	1.063	1.000
	B - Stoke Rd	1.000	1.000	1.313	1.000
	C - Drayton Rd	1.069	1.000	1.000	1.000
	D - Whaddon Rd	1.063	1.030	1.042	1.000

08:15 - 08:30

Heavy Vehicle Percentages

		To			
		A - Bletchley Rd	B - Stoke Rd	C - Drayton Rd	D - Whaddon Rd
From	A - Bletchley Rd	0	6	3	0
	B - Stoke Rd	5	0	18	0
	C - Drayton Rd	6	0	0	3
	D - Whaddon Rd	3	4	6	0

Average PCU Per Veh

		To			
		A - Bletchley Rd	B - Stoke Rd	C - Drayton Rd	D - Whaddon Rd
From	A - Bletchley Rd	1.000	1.061	1.029	1.000
	B - Stoke Rd	1.050	1.000	1.182	1.000
	C - Drayton Rd	1.057	1.000	1.000	1.026
	D - Whaddon Rd	1.035	1.040	1.059	1.000

08:30 - 08:45

Heavy Vehicle Percentages

		To			
		A - Bletchley Rd	B - Stoke Rd	C - Drayton Rd	D - Whaddon Rd
From	A - Bletchley Rd	0	3	0	0
	B - Stoke Rd	0	0	28	0
	C - Drayton Rd	1	0	0	4
	D - Whaddon Rd	0	4	0	0

Average PCU Per Veh

		To			
		A - Bletchley Rd	B - Stoke Rd	C - Drayton Rd	D - Whaddon Rd
From	A - Bletchley Rd	1.000	1.026	1.000	1.000
	B - Stoke Rd	1.000	1.000	1.280	1.000
	C - Drayton Rd	1.014	1.000	1.000	1.035
	D - Whaddon Rd	1.000	1.042	1.000	1.000

08:45 - 09:00

Heavy Vehicle Percentages

		To			
		A - Bletchley Rd	B - Stoke Rd	C - Drayton Rd	D - Whaddon Rd
From	A - Bletchley Rd	0	0	3	0
	B - Stoke Rd	0	0	15	2
	C - Drayton Rd	3	0	0	0
	D - Whaddon Rd	0	10	0	0

Average PCU Per Veh

		To			
		A - Bletchley Rd	B - Stoke Rd	C - Drayton Rd	D - Whaddon Rd
From	A - Bletchley Rd	1.000	1.000	1.026	1.000
	B - Stoke Rd	1.000	1.000	1.150	1.017
	C - Drayton Rd	1.026	1.000	1.000	1.000
	D - Whaddon Rd	1.000	1.098	1.000	1.000

Detailed Demand Data

Demand for each time segment

Arm	Time Segment	Demand (Veh/hr)	Demand in PCU (PCU/hr)
A - Bletchley Rd	07:30-07:45	160	164
	07:45-08:00	191	191
	08:00-08:15	235	255
	08:15-08:30	235	244
	08:30-08:45	191	194
	08:45-09:00	160	162
B - Stoke Rd	07:30-07:45	291	296
	07:45-08:00	348	355
	08:00-08:15	426	435
	08:15-08:30	426	437
	08:30-08:45	348	354
	08:45-09:00	291	298
C - Drayton Rd	07:30-07:45	114	116
	07:45-08:00	137	141
	08:00-08:15	167	175
	08:15-08:30	167	174
	08:30-08:45	137	139
	08:45-09:00	114	116
D - Whaddon Rd	07:30-07:45	229	236
	07:45-08:00	273	281
	08:00-08:15	335	347
	08:15-08:30	335	348
	08:30-08:45	273	282
	08:45-09:00	229	246

Results

Results Summary for whole modelled period

Stream	Max RFC	Max Delay (s)	Max Queue (Veh)	Max LOS	Average Demand (Veh/hr)	Total Junction Arrivals (Veh)
B-ACD	0.99	118.11	13.6	F	355	533
A-BCD	0.06	5.74	0.1	A	35	52
A-B					101	151
A-C					60	90
D-ABC	0.72	27.53	2.5	D	279	418
C-ABD	0.05	5.83	0.1	A	27	41
C-D					26	40
C-A					86	129

Main Results for each time segment

07:30 - 07:45

Stream	Total Demand (Veh/hr)	Junction Arrivals (Veh)	Capacity (Veh/hr)	RFC	Throughput (Veh/hr)	Start queue (Veh)	End queue (Veh)	Delay (s)	Unsignalised level of service
B-ACD	291	73	463	0.630	285	0.0	1.6	19.611	C
A-BCD	27	7	654	0.041	27	0.0	0.1	5.736	A
A-B	84	21			84				
A-C	50	12			50				
D-ABC	229	57	498	0.460	226	0.0	0.8	13.056	B
C-ABD	21	5	643	0.033	21	0.0	0.0	5.785	A
C-D	22	5			22				
C-A	71	18			71				

07:45 - 08:00

Stream	Total Demand (Veh/hr)	Junction Arrivals (Veh)	Capacity (Veh/hr)	RFC	Throughput (Veh/hr)	Start queue (Veh)	End queue (Veh)	Delay (s)	Unsignalised level of service
B-ACD	348	87	450	0.774	342	1.6	3.0	31.705	D
A-BCD	33	8	686	0.049	33	0.1	0.1	5.600	A
A-B	99	25			99				
A-C	59	15			59				
D-ABC	273	68	487	0.561	272	0.8	1.2	16.613	C
C-ABD	26	7	648	0.041	26	0.0	0.1	5.776	A
C-D	26	6			26				
C-A	85	21			85				

08:00 - 08:15

Stream	Total Demand (Veh/hr)	Junction Arrivals (Veh)	Capacity (Veh/hr)	RFC	Throughput (Veh/hr)	Start queue (Veh)	End queue (Veh)	Delay (s)	Unsignalised level of service
B-ACD	426	107	431	0.989	399	3.0	9.8	76.773	F
A-BCD	44	11	698	0.063	44	0.1	0.1	5.434	A
A-B	120	30			120				
A-C	71	18			71				
D-ABC	335	84	465	0.720	330	1.2	2.3	25.648	D
C-ABD	34	8	650	0.052	34	0.1	0.1	5.826	A
C-D	31	8			31				
C-A	102	26			102				

08:15 - 08:30

Stream	Total Demand (Veh/hr)	Junction Arrivals (Veh)	Capacity (Veh/hr)	RFC	Throughput (Veh/hr)	Start queue (Veh)	End queue (Veh)	Delay (s)	Unsignalised level of service
B-ACD	426	107	429	0.994	411	9.8	13.5	118.108	F
A-BCD	44	11	701	0.062	44	0.1	0.1	5.524	A
A-B	120	30			120				
A-C	71	18			71				
D-ABC	335	84	463	0.723	334	2.3	2.5	27.528	D
C-ABD	34	8	653	0.052	34	0.1	0.1	5.819	A
C-D	31	8			31				
C-A	102	26			102				

08:30 - 08:45

Stream	Total Demand (Veh/hr)	Junction Arrivals (Veh)	Capacity (Veh/hr)	RFC	Throughput (Veh/hr)	Start queue (Veh)	End queue (Veh)	Delay (s)	Unsignalised level of service
B-ACD	348	87	451	0.771	386	13.5	4.1	67.809	F
A-BCD	33	8	686	0.049	33	0.1	0.1	5.554	A
A-B	99	25			99				
A-C	59	15			59				
D-ABC	273	68	484	0.564	278	2.5	1.4	17.967	C
C-ABD	26	7	648	0.041	26	0.1	0.1	5.813	A
C-D	26	6			26				
C-A	84	21			84				

08:45 - 09:00

Stream	Total Demand (Veh/hr)	Junction Arrivals (Veh)	Capacity (Veh/hr)	RFC	Throughput (Veh/hr)	Start queue (Veh)	End queue (Veh)	Delay (s)	Unsignalised level of service
B-ACD	291	73	460	0.633	300	4.1	1.8	23.506	C
A-BCD	27	7	673	0.040	27	0.1	0.1	5.580	A
A-B	84	21			84				
A-C	50	12			50				
D-ABC	229	57	477	0.480	231	1.4	0.9	14.120	B
C-ABD	21	5	644	0.033	21	0.1	0.0	5.789	A
C-D	22	5			22				
C-A	71	18			71				

2020 Base, PM

Data Errors and Warnings

No errors or warnings

Junction Network

Junctions

Junction	Name	Junction type	Major road direction	Use circulating lanes	Junction Delay (s)	Junction LOS
J3	Bletchley Road/ Stoke Road/ Drayton Road/ Whaddon Road	Crossroads	Two-way		30.97	D

Junction Network Options

Driving side	Lighting
Left	Normal/unknown

Traffic Demand

Demand Set Details

ID	Scenario name	Time Period name	Traffic profile type	Start time (HH:mm)	Finish time (HH:mm)	Time segment length (min)	Run automatically
D2	2020 Base	PM	ONE HOUR	16:45	18:15	15	✓

Vehicle mix varies over time	Vehicle mix varies over turn	Vehicle mix varies over entry	Vehicle mix source	PCU Factor for a HV (PCU)
✓	✓	✓	HV Percentages	2.00

Demand overview (Traffic)

Arm	Linked arm	Profile type	Use O-D data	Average Demand (Veh/hr)	Scaling Factor (%)
A - Bletchley Rd		ONE HOUR	✓	207	100.000
B - Stoke Rd		ONE HOUR	✓	350	100.000
C - Drayton Rd		ONE HOUR	✓	102	100.000
D - Whaddon Rd		ONE HOUR	✓	300	100.000

Origin-Destination Data

Demand (Veh/hr)

		To			
		A - Bletchley Rd	B - Stoke Rd	C - Drayton Rd	D - Whaddon Rd
From	A - Bletchley Rd	0	70	80	57
	B - Stoke Rd	107	0	27	216
	C - Drayton Rd	62	13	0	27
	D - Whaddon Rd	36	242	22	0

Proportions

		To			
		A - Bletchley Rd	B - Stoke Rd	C - Drayton Rd	D - Whaddon Rd
From	A - Bletchley Rd	0.00	0.34	0.39	0.28
	B - Stoke Rd	0.31	0.00	0.08	0.62
	C - Drayton Rd	0.61	0.13	0.00	0.26
	D - Whaddon Rd	0.12	0.81	0.07	0.00

Vehicle Mix

16:45 - 17:00

Heavy Vehicle Percentages

		To			
		A - Bletchley Rd	B - Stoke Rd	C - Drayton Rd	D - Whaddon Rd
From	A - Bletchley Rd	0	3	0	2
	B - Stoke Rd	1	0	0	2
	C - Drayton Rd	2	0	0	0
	D - Whaddon Rd	0	2	0	0

Average PCU Per Veh

		To			
		A - Bletchley Rd	B - Stoke Rd	C - Drayton Rd	D - Whaddon Rd
From	A - Bletchley Rd	1.000	1.029	1.000	1.018
	B - Stoke Rd	1.009	1.000	1.000	1.019
	C - Drayton Rd	1.016	1.000	1.000	1.000
	D - Whaddon Rd	1.000	1.017	1.000	1.000

17:00 - 17:15

Heavy Vehicle Percentages

		To			
		A - Bletchley Rd	B - Stoke Rd	C - Drayton Rd	D - Whaddon Rd
From	A - Bletchley Rd	0	0	0	0
	B - Stoke Rd	0	0	0	0
	C - Drayton Rd	0	0	0	0
	D - Whaddon Rd	0	3	8	0

Average PCU Per Veh

		To			
		A - Bletchley Rd	B - Stoke Rd	C - Drayton Rd	D - Whaddon Rd
From	A - Bletchley Rd	1.000	1.000	1.000	1.000
	B - Stoke Rd	1.000	1.000	1.000	1.000
	C - Drayton Rd	1.000	1.000	1.000	1.000
	D - Whaddon Rd	1.000	1.028	1.083	1.000

17:15 - 17:30

Heavy Vehicle Percentages

		To			
		A - Bletchley Rd	B - Stoke Rd	C - Drayton Rd	D - Whaddon Rd
From	A - Bletchley Rd	0	7	0	0
	B - Stoke Rd	4	0	13	0
	C - Drayton Rd	2	0	0	0
	D - Whaddon Rd	0	3	3	0

Average PCU Per Veh

		To			
		A - Bletchley Rd	B - Stoke Rd	C - Drayton Rd	D - Whaddon Rd
From	A - Bletchley Rd	1.000	1.069	1.000	1.000
	B - Stoke Rd	1.044	1.000	1.125	1.000
	C - Drayton Rd	1.021	1.000	1.000	1.000
	D - Whaddon Rd	1.000	1.025	1.027	1.000

17:30 - 17:45

Heavy Vehicle Percentages

		To			
		A - Bletchley Rd	B - Stoke Rd	C - Drayton Rd	D - Whaddon Rd
From	A - Bletchley Rd	0	0	0	0
	B - Stoke Rd	3	0	7	2
	C - Drayton Rd	3	0	0	0
	D - Whaddon Rd	0	1	7	0

Average PCU Per Veh

		To			
		A - Bletchley Rd	B - Stoke Rd	C - Drayton Rd	D - Whaddon Rd
From	A - Bletchley Rd	1.000	1.000	1.000	1.000
	B - Stoke Rd	1.035	1.000	1.071	1.018
	C - Drayton Rd	1.026	1.000	1.000	1.000
	D - Whaddon Rd	1.000	1.011	1.069	1.000

17:45 - 18:00

Heavy Vehicle Percentages

		To			
		A - Bletchley Rd	B - Stoke Rd	C - Drayton Rd	D - Whaddon Rd
From	A - Bletchley Rd	0	0	0	0
	B - Stoke Rd	0	0	6	0
	C - Drayton Rd	0	0	0	0
	D - Whaddon Rd	0	1	4	0

Average PCU Per Veh

		To			
		A - Bletchley Rd	B - Stoke Rd	C - Drayton Rd	D - Whaddon Rd
From	A - Bletchley Rd	1.000	1.000	1.000	1.000
	B - Stoke Rd	1.000	1.000	1.063	1.000
	C - Drayton Rd	1.000	1.000	1.000	1.000
	D - Whaddon Rd	1.000	1.008	1.039	1.000

18:00 - 18:15

Heavy Vehicle Percentages

		To			
		A - Bletchley Rd	B - Stoke Rd	C - Drayton Rd	D - Whaddon Rd
From	A - Bletchley Rd	0	0	0	6
	B - Stoke Rd	3	0	0	0
	C - Drayton Rd	0	0	0	0
	D - Whaddon Rd	0	0	0	0

Average PCU Per Veh

		To			
		A - Bletchley Rd	B - Stoke Rd	C - Drayton Rd	D - Whaddon Rd
From	A - Bletchley Rd	1.000	1.000	1.000	1.063
	B - Stoke Rd	1.033	1.000	1.000	1.000
	C - Drayton Rd	1.000	1.000	1.000	1.000
	D - Whaddon Rd	1.000	1.000	1.000	1.000

Detailed Demand Data

Demand for each time segment

Arm	Time Segment	Demand (Veh/hr)	Demand in PCU (PCU/hr)
A - Bletchley Rd	16:45-17:00	156	158
	17:00-17:15	186	186
	17:15-17:30	228	233
	17:30-17:45	228	228
	17:45-18:00	186	186
	18:00-18:15	156	159
B - Stoke Rd	16:45-17:00	263	267
	17:00-17:15	315	315
	17:15-17:30	385	394
	17:30-17:45	385	396
	17:45-18:00	315	316
	18:00-18:15	263	266
C - Drayton Rd	16:45-17:00	77	78
	17:00-17:15	92	92
	17:15-17:30	112	114
	17:30-17:45	112	114
	17:45-18:00	92	92
	18:00-18:15	77	77
D - Whaddon Rd	16:45-17:00	226	229
	17:00-17:15	270	277
	17:15-17:30	330	338
	17:30-17:45	330	335
	17:45-18:00	270	272
	18:00-18:15	226	226

Results

Results Summary for whole modelled period

Stream	Max RFC	Max Delay (s)	Max Queue (Veh)	Max LOS	Average Demand (Veh/hr)	Total Junction Arrivals (Veh)
B-ACD	0.89	62.75	6.3	F	321	482
A-BCD	0.12	6.03	0.2	A	66	99
A-B					58	87
A-C					66	99
D-ABC	0.69	23.88	2.1	C	275	413
C-ABD	0.03	5.92	0.0	A	14	21
C-D					24	36
C-A					56	83

Main Results for each time segment

16:45 - 17:00

Stream	Total Demand (Veh/hr)	Junction Arrivals (Veh)	Capacity (Veh/hr)	RFC	Throughput (Veh/hr)	Start queue (Veh)	End queue (Veh)	Delay (s)	Unsignalised level of service
B-ACD	263	66	465	0.566	258	0.0	1.2	17.026	C
A-BCD	52	13	655	0.079	51	0.0	0.1	5.967	A
A-B	49	12			49				
A-C	55	14			55				
D-ABC	226	56	508	0.445	223	0.0	0.8	12.497	B
C-ABD	11	3	623	0.018	11	0.0	0.0	5.884	A
C-D	20	5			20				
C-A	46	11			46				

17:00 - 17:15

Stream	Total Demand (Veh/hr)	Junction Arrivals (Veh)	Capacity (Veh/hr)	RFC	Throughput (Veh/hr)	Start queue (Veh)	End queue (Veh)	Delay (s)	Unsignalised level of service
B-ACD	315	79	460	0.684	311	1.2	2.1	24.198	C
A-BCD	64	16	676	0.095	64	0.1	0.1	5.929	A
A-B	57	14			57				
A-C	65	16			65				
D-ABC	270	67	490	0.550	268	0.8	1.2	15.853	C
C-ABD	13	3	624	0.021	13	0.0	0.0	5.894	A
C-D	24	6			24				
C-A	55	14			55				

17:15 - 17:30

Stream	Total Demand (Veh/hr)	Junction Arrivals (Veh)	Capacity (Veh/hr)	RFC	Throughput (Veh/hr)	Start queue (Veh)	End queue (Veh)	Delay (s)	Unsignalised level of service
B-ACD	385	96	433	0.891	373	2.1	5.2	48.438	E
A-BCD	83	21	690	0.120	82	0.1	0.2	5.902	A
A-B	68	17			68				
A-C	77	19			77				
D-ABC	330	83	478	0.691	327	1.2	2.1	23.355	C
C-ABD	17	4	624	0.027	17	0.0	0.0	5.919	A
C-D	29	7			29				
C-A	66	17			66				

17:30 - 17:45

Stream	Total Demand (Veh/hr)	Junction Arrivals (Veh)	Capacity (Veh/hr)	RFC	Throughput (Veh/hr)	Start queue (Veh)	End queue (Veh)	Delay (s)	Unsignalised level of service
B-ACD	385	96	431	0.894	381	5.2	6.2	62.754	F
A-BCD	83	21	692	0.119	83	0.2	0.2	5.940	A
A-B	68	17			68				
A-C	77	19			77				
D-ABC	330	83	482	0.685	330	2.1	2.1	23.878	C
C-ABD	17	4	626	0.027	17	0.0	0.0	5.916	A
C-D	29	7			29				
C-A	66	17			66				

17:45 - 18:00

Stream	Total Demand (Veh/hr)	Junction Arrivals (Veh)	Capacity (Veh/hr)	RFC	Throughput (Veh/hr)	Start queue (Veh)	End queue (Veh)	Delay (s)	Unsignalised level of service
B-ACD	315	79	457	0.687	330	6.2	2.5	32.039	D
A-BCD	64	16	676	0.095	64	0.2	0.1	5.884	A
A-B	57	14			57				
A-C	65	16			65				
D-ABC	270	67	499	0.540	273	2.1	1.2	16.250	C
C-ABD	13	3	624	0.022	13	0.0	0.0	5.904	A
C-D	24	6			24				
C-A	55	14			55				

18:00 - 18:15

Stream	Total Demand (Veh/hr)	Junction Arrivals (Veh)	Capacity (Veh/hr)	RFC	Throughput (Veh/hr)	Start queue (Veh)	End queue (Veh)	Delay (s)	Unsignalised level of service
B-ACD	263	66	467	0.565	268	2.5	1.3	18.411	C
A-BCD	52	13	633	0.083	52	0.1	0.1	6.028	A
A-B	48	12			48				
A-C	55	14			55				
D-ABC	226	56	514	0.439	228	1.2	0.8	12.742	B
C-ABD	11	3	622	0.018	11	0.0	0.0	5.889	A
C-D	20	5			20				
C-A	46	11			46				

2033 Base, AM

Data Errors and Warnings

No errors or warnings

Junction Network

Junctions

Junction	Name	Junction type	Major road direction	Use circulating lanes	Junction Delay (s)	Junction LOS
J3	Bletchley Road/ Stoke Road/ Drayton Road/ Whaddon Road	Crossroads	Two-way		148.64	F

Junction Network Options

Driving side	Lighting
Left	Normal/unknown

Traffic Demand

Demand Set Details

ID	Scenario name	Time Period name	Traffic profile type	Start time (HH:mm)	Finish time (HH:mm)	Time segment length (min)	Run automatically
D13	2033 Base	AM	ONE HOUR	07:30	09:00	15	✓

Vehicle mix varies over turn	Vehicle mix varies over entry	Vehicle mix source	PCU Factor for a HV (PCU)
✓	✓	HV Percentages	2.00

Demand overview (Traffic)

Arm	Linked arm	Profile type	Use O-D data	Average Demand (Veh/hr)	Scaling Factor (%)
A - Bletchley Rd		ONE HOUR	✓	244	100.000
B - Stoke Rd		ONE HOUR	✓	448	100.000
C - Drayton Rd		ONE HOUR	✓	175	100.000
D - Whaddon Rd		ONE HOUR	✓	362	100.000

Origin-Destination Data

Demand (Veh/hr)

		To			
		A - Bletchley Rd	B - Stoke Rd	C - Drayton Rd	D - Whaddon Rd
From	A - Bletchley Rd	0	133	79	32
	B - Stoke Rd	111	0	30	307
	C - Drayton Rd	112	28	0	35
	D - Whaddon Rd	56	272	34	0

Proportions

		To			
		A - Bletchley Rd	B - Stoke Rd	C - Drayton Rd	D - Whaddon Rd
From	A - Bletchley Rd	0.00	0.54	0.32	0.13
	B - Stoke Rd	0.25	0.00	0.07	0.68
	C - Drayton Rd	0.64	0.16	0.00	0.20
	D - Whaddon Rd	0.16	0.75	0.09	0.00

Vehicle Mix

Heavy Vehicle Percentages

		To			
		A - Bletchley Rd	B - Stoke Rd	C - Drayton Rd	D - Whaddon Rd
From	A - Bletchley Rd	0	2	1	4
	B - Stoke Rd	2	0	0	2
	C - Drayton Rd	1	0	0	3
	D - Whaddon Rd	0	3	11	0

Average PCU Per Veh

		To			
		A - Bletchley Rd	B - Stoke Rd	C - Drayton Rd	D - Whaddon Rd
From	A - Bletchley Rd	1.000	1.017	1.014	1.036
	B - Stoke Rd	1.021	1.000	1.000	1.015
	C - Drayton Rd	1.010	1.000	1.000	1.033
	D - Whaddon Rd	1.000	1.026	1.107	1.000

Detailed Demand Data

Demand for each time segment

Arm	Time Segment	Demand (Veh/hr)	Demand in PCU (PCU/hr)
A - Bletchley Rd	07:30-07:45	184	187
	07:45-08:00	220	224
	08:00-08:15	269	274
	08:15-08:30	269	274
	08:30-08:45	220	224
	08:45-09:00	184	187
B - Stoke Rd	07:30-07:45	337	342
	07:45-08:00	402	409
	08:00-08:15	493	500
	08:15-08:30	493	500
	08:30-08:45	402	409
	08:45-09:00	337	342
C - Drayton Rd	07:30-07:45	132	133
	07:45-08:00	157	159
	08:00-08:15	193	195
	08:15-08:30	193	195
	08:30-08:45	157	159
	08:45-09:00	132	133
D - Whaddon Rd	07:30-07:45	273	281
	07:45-08:00	326	336
	08:00-08:15	399	411
	08:15-08:30	399	411
	08:30-08:45	326	336
	08:45-09:00	273	281

Results

Results Summary for whole modelled period

Stream	Max RFC	Max Delay (s)	Max Queue (Veh)	Max LOS	Average Demand (Veh/hr)	Total Junction Arrivals (Veh)
B-ACD	1.18	361.09	46.1	F	411	616
A-BCD	0.08	5.69	0.1	A	42	63
A-B					114	172
A-C					68	102
D-ABC	0.88	58.40	6.0	F	333	499
C-ABD	0.06	5.79	0.1	A	32	48
C-D					31	46
C-A					98	147

Main Results for each time segment

07:30 - 07:45

Stream	Total Demand (Veh/hr)	Junction Arrivals (Veh)	Capacity (Veh/hr)	RFC	Throughput (Veh/hr)	Start queue (Veh)	End queue (Veh)	Delay (s)	Unsignalised level of service
B-ACD	337	84	453	0.744	327	0.0	2.6	26.690	D
A-BCD	32	8	664	0.048	32	0.0	0.1	5.687	A
A-B	95	24			95				
A-C	57	14			57				
D-ABC	273	68	488	0.559	268	0.0	1.2	16.051	C
C-ABD	25	6	647	0.039	25	0.0	0.1	5.780	A
C-D	25	6			25				
C-A	81	20			81				

07:45 - 08:00

Stream	Total Demand (Veh/hr)	Junction Arrivals (Veh)	Capacity (Veh/hr)	RFC	Throughput (Veh/hr)	Start queue (Veh)	End queue (Veh)	Delay (s)	Unsignalised level of service
B-ACD	402	101	438	0.918	387	2.6	6.4	57.140	F
A-BCD	40	10	680	0.059	40	0.1	0.1	5.627	A
A-B	113	28			113				
A-C	67	17			67				
D-ABC	326	81	474	0.688	322	1.2	2.0	23.262	C
C-ABD	31	8	653	0.048	31	0.1	0.1	5.784	A
C-D	30	8			30				
C-A	96	24			96				

08:00 - 08:15

Stream	Total Demand (Veh/hr)	Junction Arrivals (Veh)	Capacity (Veh/hr)	RFC	Throughput (Veh/hr)	Start queue (Veh)	End queue (Veh)	Delay (s)	Unsignalised level of service
B-ACD	493	123	418	1.178	411	6.4	26.8	167.505	F
A-BCD	53	13	702	0.076	53	0.1	0.1	5.548	A
A-B	135	34			135				
A-C	81	20			81				
D-ABC	399	100	454	0.878	387	2.0	5.1	46.328	E
C-ABD	40	10	662	0.061	40	0.1	0.1	5.786	A
C-D	36	9			36				
C-A	116	29			116				

08:15 - 08:30

Stream	Total Demand (Veh/hr)	Junction Arrivals (Veh)	Capacity (Veh/hr)	RFC	Throughput (Veh/hr)	Start queue (Veh)	End queue (Veh)	Delay (s)	Unsignalised level of service
B-ACD	493	123	417	1.182	416	26.8	46.1	329.824	F
A-BCD	53	13	702	0.076	53	0.1	0.1	5.550	A
A-B	135	34			135				
A-C	80	20			80				
D-ABC	399	100	451	0.884	395	5.1	6.0	58.404	F
C-ABD	40	10	662	0.061	40	0.1	0.1	5.790	A
C-D	36	9			36				
C-A	116	29			116				

08:30 - 08:45

Stream	Total Demand (Veh/hr)	Junction Arrivals (Veh)	Capacity (Veh/hr)	RFC	Throughput (Veh/hr)	Start queue (Veh)	End queue (Veh)	Delay (s)	Unsignalised level of service
B-ACD	402	101	437	0.921	428	46.1	39.9	361.094	F
A-BCD	40	10	680	0.059	40	0.1	0.1	5.628	A
A-B	112	28			112				
A-C	67	17			67				
D-ABC	326	81	467	0.697	340	6.0	2.5	30.652	D
C-ABD	31	8	653	0.048	31	0.1	0.1	5.792	A
C-D	30	8			30				
C-A	96	24			96				

08:45 - 09:00

Stream	Total Demand (Veh/hr)	Junction Arrivals (Veh)	Capacity (Veh/hr)	RFC	Throughput (Veh/hr)	Start queue (Veh)	End queue (Veh)	Delay (s)	Unsignalised level of service
B-ACD	337	84	452	0.745	441	39.9	13.8	226.573	F
A-BCD	32	8	665	0.048	32	0.1	0.1	5.693	A
A-B	95	24			95				
A-C	57	14			57				
D-ABC	273	68	482	0.566	277	2.5	1.4	17.938	C
C-ABD	25	6	647	0.039	25	0.1	0.1	5.790	A
C-D	25	6			25				
C-A	81	20			81				

2033 Base, PM

Data Errors and Warnings

No errors or warnings

Junction Network

Junctions

Junction	Name	Junction type	Major road direction	Use circulating lanes	Junction Delay (s)	Junction LOS
J3	Bletchley Road/ Stoke Road/ Drayton Road/ Whaddon Road	Crossroads	Two-way		89.37	F

Junction Network Options

Driving side	Lighting
Left	Normal/unknown

Traffic Demand

Demand Set Details

ID	Scenario name	Time Period name	Traffic profile type	Start time (HH:mm)	Finish time (HH:mm)	Time segment length (min)	Run automatically
D14	2033 Base	PM	ONE HOUR	16:45	18:15	15	✓

Vehicle mix varies over turn	Vehicle mix varies over entry	Vehicle mix source	PCU Factor for a HV (PCU)
✓	✓	HV Percentages	2.00

Demand overview (Traffic)

Arm	Linked arm	Profile type	Use O-D data	Average Demand (Veh/hr)	Scaling Factor (%)
A - Bletchley Rd		ONE HOUR	✓	239	100.000
B - Stoke Rd		ONE HOUR	✓	414	100.000
C - Drayton Rd		ONE HOUR	✓	119	100.000
D - Whaddon Rd		ONE HOUR	✓	352	100.000

Origin-Destination Data

Demand (Veh/hr)

		To			
		A - Bletchley Rd	B - Stoke Rd	C - Drayton Rd	D - Whaddon Rd
From	A - Bletchley Rd	0	81	92	66
	B - Stoke Rd	123	0	31	259
	C - Drayton Rd	72	15	0	33
	D - Whaddon Rd	42	284	26	0

Proportions

		To			
		A - Bletchley Rd	B - Stoke Rd	C - Drayton Rd	D - Whaddon Rd
From	A - Bletchley Rd	0.00	0.34	0.39	0.28
	B - Stoke Rd	0.30	0.00	0.08	0.63
	C - Drayton Rd	0.60	0.13	0.00	0.28
	D - Whaddon Rd	0.12	0.81	0.07	0.00

Vehicle Mix

Heavy Vehicle Percentages

		To			
		A - Bletchley Rd	B - Stoke Rd	C - Drayton Rd	D - Whaddon Rd
From	A - Bletchley Rd	0	3	0	2
	B - Stoke Rd	1	0	0	2
	C - Drayton Rd	2	0	0	0
	D - Whaddon Rd	0	2	0	0

Average PCU Per Veh

		To			
		A - Bletchley Rd	B - Stoke Rd	C - Drayton Rd	D - Whaddon Rd
From	A - Bletchley Rd	1.000	1.029	1.000	1.018
	B - Stoke Rd	1.009	1.000	1.000	1.019
	C - Drayton Rd	1.016	1.000	1.000	1.000
	D - Whaddon Rd	1.000	1.017	1.000	1.000

Detailed Demand Data

Demand for each time segment

Arm	Time Segment	Demand (Veh/hr)	Demand in PCU (PCU/hr)
A - Bletchley Rd	16:45-17:00	180	182
	17:00-17:15	215	218
	17:15-17:30	263	267
	17:30-17:45	263	267
	17:45-18:00	215	218
	18:00-18:15	180	182
B - Stoke Rd	16:45-17:00	311	316
	17:00-17:15	372	377
	17:15-17:30	455	462
	17:30-17:45	455	462
	17:45-18:00	372	377
	18:00-18:15	311	316
C - Drayton Rd	16:45-17:00	90	91
	17:00-17:15	107	108
	17:15-17:30	132	133
	17:30-17:45	132	133
	17:45-18:00	107	108
	18:00-18:15	90	91
D - Whaddon Rd	16:45-17:00	265	268
	17:00-17:15	316	320
	17:15-17:30	387	392
	17:30-17:45	387	392
	17:45-18:00	316	320
	18:00-18:15	265	268

Results

Results Summary for whole modelled period

Stream	Max RFC	Max Delay (s)	Max Queue (Veh)	Max LOS	Average Demand (Veh/hr)	Total Junction Arrivals (Veh)
B-ACD	1.08	205.46	26.7	F	380	569
A-BCD	0.14	6.05	0.2	A	80	119
A-B					65	98
A-C					74	112
D-ABC	0.83	41.89	4.2	E	323	484
C-ABD	0.03	5.93	0.0	A	16	25
C-D					29	44
C-A					64	96

Main Results for each time segment

16:45 - 17:00

Stream	Total Demand (Veh/hr)	Junction Arrivals (Veh)	Capacity (Veh/hr)	RFC	Throughput (Veh/hr)	Start queue (Veh)	End queue (Veh)	Delay (s)	Unsignalised level of service
B-ACD	311	78	456	0.683	303	0.0	2.0	22.615	C
A-BCD	62	15	664	0.093	61	0.0	0.1	5.972	A
A-B	55	14			55				
A-C	63	16			63				
D-ABC	265	66	499	0.530	260	0.0	1.1	14.821	B
C-ABD	13	3	624	0.021	13	0.0	0.0	5.887	A
C-D	24	6			24				
C-A	53	13			53				

17:00 - 17:15

Stream	Total Demand (Veh/hr)	Junction Arrivals (Veh)	Capacity (Veh/hr)	RFC	Throughput (Veh/hr)	Start queue (Veh)	End queue (Veh)	Delay (s)	Unsignalised level of service
B-ACD	372	93	441	0.843	363	2.0	4.2	41.687	E
A-BCD	77	19	677	0.114	77	0.1	0.2	6.000	A
A-B	64	16			64				
A-C	74	18			74				
D-ABC	316	79	487	0.649	313	1.1	1.7	20.445	C
C-ABD	16	4	626	0.025	16	0.0	0.0	5.903	A
C-D	29	7			29				
C-A	63	16			63				

17:15 - 17:30

Stream	Total Demand (Veh/hr)	Junction Arrivals (Veh)	Capacity (Veh/hr)	RFC	Throughput (Veh/hr)	Start queue (Veh)	End queue (Veh)	Delay (s)	Unsignalised level of service
B-ACD	455	114	421	1.081	406	4.2	16.6	114.500	F
A-BCD	100	25	695	0.144	100	0.2	0.2	6.047	A
A-B	76	19			76				
A-C	87	22			87				
D-ABC	387	97	470	0.824	379	1.7	3.9	36.496	E
C-ABD	20	5	628	0.032	20	0.0	0.0	5.925	A
C-D	35	9			35				
C-A	76	19			76				

17:30 - 17:45

Stream	Total Demand (Veh/hr)	Junction Arrivals (Veh)	Capacity (Veh/hr)	RFC	Throughput (Veh/hr)	Start queue (Veh)	End queue (Veh)	Delay (s)	Unsignalised level of service
B-ACD	455	114	421	1.083	415	16.6	26.7	205.463	F
A-BCD	100	25	695	0.144	100	0.2	0.2	6.051	A
A-B	76	19			76				
A-C	87	22			87				
D-ABC	387	97	468	0.827	386	3.9	4.2	41.891	E
C-ABD	20	5	628	0.032	20	0.0	0.0	5.930	A
C-D	35	9			35				
C-A	76	19			76				

17:45 - 18:00

Stream	Total Demand (Veh/hr)	Junction Arrivals (Veh)	Capacity (Veh/hr)	RFC	Throughput (Veh/hr)	Start queue (Veh)	End queue (Veh)	Delay (s)	Unsignalised level of service
B-ACD	372	93	440	0.845	424	26.7	13.6	177.291	F
A-BCD	77	19	677	0.114	77	0.2	0.2	6.007	A
A-B	64	16			64				
A-C	73	18			73				
D-ABC	316	79	484	0.653	325	4.2	2.0	23.704	C
C-ABD	16	4	625	0.025	16	0.0	0.0	5.910	A
C-D	29	7			29				
C-A	63	16			63				

18:00 - 18:15

Stream	Total Demand (Veh/hr)	Junction Arrivals (Veh)	Capacity (Veh/hr)	RFC	Throughput (Veh/hr)	Start queue (Veh)	End queue (Veh)	Delay (s)	Unsignalised level of service
B-ACD	311	78	455	0.685	356	13.6	2.4	48.026	E
A-BCD	62	15	664	0.093	62	0.2	0.1	5.987	A
A-B	55	14			55				
A-C	63	16			63				
D-ABC	265	66	498	0.532	268	2.0	1.2	15.885	C
C-ABD	13	3	624	0.021	13	0.0	0.0	5.893	A
C-D	24	6			24				
C-A	53	13			53				

2033 Base + CD + D, AM

Data Errors and Warnings

No errors or warnings

Junction Network

Junctions

Junction	Name	Junction type	Major road direction	Use circulating lanes	Junction Delay (s)	Junction LOS
J3	Bletchley Road/ Stoke Road/ Drayton Road/ Whaddon Road	Crossroads	Two-way		258.50	F

Junction Network Options

Driving side	Lighting
Left	Normal/unknown

Traffic Demand

Demand Set Details

ID	Scenario name	Time Period name	Traffic profile type	Start time (HH:mm)	Finish time (HH:mm)	Time segment length (min)	Run automatically
D15	2033 Base + CD + D	AM	ONE HOUR	07:30	09:00	15	✓

Vehicle mix varies over turn	Vehicle mix varies over entry	Vehicle mix source	PCU Factor for a HV (PCU)
✓	✓	HV Percentages	2.00

Demand overview (Traffic)

Arm	Linked arm	Profile type	Use O-D data	Average Demand (Veh/hr)	Scaling Factor (%)
A - Bletchley Rd		ONE HOUR	✓	244	100.000
B - Stoke Rd		ONE HOUR	✓	479	100.000
C - Drayton Rd		ONE HOUR	✓	187	100.000
D - Whaddon Rd		ONE HOUR	✓	415	100.000

Origin-Destination Data

Demand (Veh/hr)

		To			
		A - Bletchley Rd	B - Stoke Rd	C - Drayton Rd	D - Whaddon Rd
From	A - Bletchley Rd	0	133	79	32
	B - Stoke Rd	111	0	30	338
	C - Drayton Rd	112	28	0	47
	D - Whaddon Rd	56	311	47	0

Proportions

		To			
		A - Bletchley Rd	B - Stoke Rd	C - Drayton Rd	D - Whaddon Rd
From	A - Bletchley Rd	0.00	0.54	0.32	0.13
	B - Stoke Rd	0.23	0.00	0.06	0.71
	C - Drayton Rd	0.60	0.15	0.00	0.25
	D - Whaddon Rd	0.14	0.75	0.11	0.00

Vehicle Mix

Heavy Vehicle Percentages

		To			
		A - Bletchley Rd	B - Stoke Rd	C - Drayton Rd	D - Whaddon Rd
From	A - Bletchley Rd	0	2	1	4
	B - Stoke Rd	2	0	0	2
	C - Drayton Rd	1	0	0	3
	D - Whaddon Rd	0	3	11	0

Average PCU Per Veh

		To			
		A - Bletchley Rd	B - Stoke Rd	C - Drayton Rd	D - Whaddon Rd
From	A - Bletchley Rd	1.000	1.017	1.014	1.036
	B - Stoke Rd	1.021	1.000	1.000	1.015
	C - Drayton Rd	1.010	1.000	1.000	1.033
	D - Whaddon Rd	1.000	1.026	1.107	1.000

Detailed Demand Data

Demand for each time segment

Arm	Time Segment	Demand (Veh/hr)	Demand in PCU (PCU/hr)
A - Bletchley Rd	07:30-07:45	184	187
	07:45-08:00	220	224
	08:00-08:15	269	274
	08:15-08:30	269	274
	08:30-08:45	220	224
	08:45-09:00	184	187
B - Stoke Rd	07:30-07:45	360	366
	07:45-08:00	430	437
	08:00-08:15	527	535
	08:15-08:30	527	535
	08:30-08:45	430	437
	08:45-09:00	360	366
C - Drayton Rd	07:30-07:45	141	143
	07:45-08:00	168	170
	08:00-08:15	205	208
	08:15-08:30	205	208
	08:30-08:45	168	170
	08:45-09:00	141	143
D - Whaddon Rd	07:30-07:45	312	322
	07:45-08:00	373	385
	08:00-08:15	457	471
	08:15-08:30	457	471
	08:30-08:45	373	385
	08:45-09:00	312	322

Results

Results Summary for whole modelled period

Stream	Max RFC	Max Delay (s)	Max Queue (Veh)	Max LOS	Average Demand (Veh/hr)	Total Junction Arrivals (Veh)
B-ACD	1.28	582.77	69.5	F	439	659
A-BCD	0.08	5.71	0.1	A	42	63
A-B					114	172
A-C					68	102
D-ABC	1.04	153.90	19.7	F	381	571
C-ABD	0.06	5.74	0.1	A	33	49
C-D					41	61
C-A					98	147

Main Results for each time segment

07:30 - 07:45

Stream	Total Demand (Veh/hr)	Junction Arrivals (Veh)	Capacity (Veh/hr)	RFC	Throughput (Veh/hr)	Start queue (Veh)	End queue (Veh)	Delay (s)	Unsignalised level of service
B-ACD	360	90	450	0.801	347	0.0	3.4	31.726	D
A-BCD	32	8	663	0.048	32	0.0	0.1	5.704	A
A-B	95	24			95				
A-C	57	14			57				
D-ABC	312	78	481	0.650	305	0.0	1.7	19.835	C
C-ABD	25	6	653	0.039	25	0.0	0.1	5.729	A
C-D	34	8			34				
C-A	81	20			81				

07:45 - 08:00

Stream	Total Demand (Veh/hr)	Junction Arrivals (Veh)	Capacity (Veh/hr)	RFC	Throughput (Veh/hr)	Start queue (Veh)	End queue (Veh)	Delay (s)	Unsignalised level of service
B-ACD	430	108	435	0.990	404	3.4	10.0	79.030	F
A-BCD	40	10	678	0.059	40	0.1	0.1	5.647	A
A-B	112	28			112				
A-C	67	17			67				
D-ABC	373	93	466	0.801	366	1.7	3.4	33.965	D
C-ABD	32	8	661	0.048	32	0.1	0.1	5.724	A
C-D	40	10			40				
C-A	96	24			96				

08:00 - 08:15

Stream	Total Demand (Veh/hr)	Junction Arrivals (Veh)	Capacity (Veh/hr)	RFC	Throughput (Veh/hr)	Start queue (Veh)	End queue (Veh)	Delay (s)	Unsignalised level of service
B-ACD	527	132	413	1.275	410	10.0	39.2	236.608	F
A-BCD	53	13	700	0.076	53	0.1	0.1	5.572	A
A-B	135	34			135				
A-C	80	20			80				
D-ABC	457	114	444	1.028	420	3.4	12.6	89.335	F
C-ABD	41	10	671	0.061	41	0.1	0.1	5.715	A
C-D	48	12			48				
C-A	116	29			116				

08:15 - 08:30

Stream	Total Demand (Veh/hr)	Junction Arrivals (Veh)	Capacity (Veh/hr)	RFC	Throughput (Veh/hr)	Start queue (Veh)	End queue (Veh)	Delay (s)	Unsignalised level of service
B-ACD	527	132	410	1.285	410	39.2	68.5	481.689	F
A-BCD	53	13	700	0.076	53	0.1	0.1	5.574	A
A-B	135	34			135				
A-C	80	20			80				
D-ABC	457	114	439	1.042	428	12.6	19.7	153.899	F
C-ABD	41	10	671	0.061	41	0.1	0.1	5.720	A
C-D	48	12			48				
C-A	116	29			116				

08:30 - 08:45

Stream	Total Demand (Veh/hr)	Junction Arrivals (Veh)	Capacity (Veh/hr)	RFC	Throughput (Veh/hr)	Start queue (Veh)	End queue (Veh)	Delay (s)	Unsignalised level of service
B-ACD	430	108	429	1.003	426	68.5	69.5	582.772	F
A-BCD	40	10	678	0.059	40	0.1	0.1	5.646	A
A-B	112	28			112				
A-C	67	17			67				
D-ABC	373	93	453	0.822	426	19.7	6.5	115.426	F
C-ABD	32	8	660	0.048	32	0.1	0.1	5.732	A
C-D	40	10			40				
C-A	96	24			96				

08:45 - 09:00

Stream	Total Demand (Veh/hr)	Junction Arrivals (Veh)	Capacity (Veh/hr)	RFC	Throughput (Veh/hr)	Start queue (Veh)	End queue (Veh)	Delay (s)	Unsignalised level of service
B-ACD	360	90	448	0.804	442	69.5	49.2	485.998	F
A-BCD	32	8	663	0.048	32	0.1	0.1	5.710	A
A-B	95	24			95				
A-C	57	14			57				
D-ABC	312	78	468	0.667	330	6.5	2.2	28.550	D
C-ABD	25	6	653	0.039	26	0.1	0.1	5.739	A
C-D	34	8			34				
C-A	81	20			81				

2033 Base + CD + D, PM

Data Errors and Warnings

No errors or warnings

Junction Network

Junctions

Junction	Name	Junction type	Major road direction	Use circulating lanes	Junction Delay (s)	Junction LOS
J3	Bletchley Road/ Stoke Road/ Drayton Road/ Whaddon Road	Crossroads	Two-way		182.53	F

Junction Network Options

Driving side	Lighting
Left	Normal/unknown

Traffic Demand

Demand Set Details

ID	Scenario name	Time Period name	Traffic profile type	Start time (HH:mm)	Finish time (HH:mm)	Time segment length (min)	Run automatically
D16	2033 Base + CD + D	PM	ONE HOUR	16:45	18:15	15	✓

Vehicle mix varies over turn	Vehicle mix varies over entry	Vehicle mix source	PCU Factor for a HV (PCU)
✓	✓	HV Percentages	2.00

Demand overview (Traffic)

Arm	Linked arm	Profile type	Use O-D data	Average Demand (Veh/hr)	Scaling Factor (%)
A - Bletchley Rd		ONE HOUR	✓	239	100.000
B - Stoke Rd		ONE HOUR	✓	456	100.000
C - Drayton Rd		ONE HOUR	✓	133	100.000
D - Whaddon Rd		ONE HOUR	✓	395	100.000

Origin-Destination Data

Demand (Veh/hr)

		To			
		A - Bletchley Rd	B - Stoke Rd	C - Drayton Rd	D - Whaddon Rd
From	A - Bletchley Rd	0	81	92	66
	B - Stoke Rd	123	0	31	301
	C - Drayton Rd	72	15	0	47
	D - Whaddon Rd	42	316	37	0

Proportions

		To			
		A - Bletchley Rd	B - Stoke Rd	C - Drayton Rd	D - Whaddon Rd
From	A - Bletchley Rd	0.00	0.34	0.39	0.28
	B - Stoke Rd	0.27	0.00	0.07	0.66
	C - Drayton Rd	0.54	0.11	0.00	0.35
	D - Whaddon Rd	0.11	0.80	0.09	0.00

Vehicle Mix

Heavy Vehicle Percentages

		To			
		A - Bletchley Rd	B - Stoke Rd	C - Drayton Rd	D - Whaddon Rd
From	A - Bletchley Rd	0	3	0	2
	B - Stoke Rd	1	0	0	2
	C - Drayton Rd	2	0	0	0
	D - Whaddon Rd	0	2	0	0

Average PCU Per Veh

		To			
		A - Bletchley Rd	B - Stoke Rd	C - Drayton Rd	D - Whaddon Rd
From	A - Bletchley Rd	1.000	1.029	1.000	1.018
	B - Stoke Rd	1.009	1.000	1.000	1.019
	C - Drayton Rd	1.016	1.000	1.000	1.000
	D - Whaddon Rd	1.000	1.017	1.000	1.000

Detailed Demand Data

Demand for each time segment

Arm	Time Segment	Demand (Veh/hr)	Demand in PCU (PCU/hr)
A - Bletchley Rd	16:45-17:00	180	182
	17:00-17:15	215	218
	17:15-17:30	263	267
	17:30-17:45	263	267
	17:45-18:00	215	218
	18:00-18:15	180	182
B - Stoke Rd	16:45-17:00	343	348
	17:00-17:15	410	416
	17:15-17:30	502	510
	17:30-17:45	502	510
	17:45-18:00	410	416
	18:00-18:15	343	348
C - Drayton Rd	16:45-17:00	100	101
	17:00-17:15	120	121
	17:15-17:30	147	148
	17:30-17:45	147	148
	17:45-18:00	120	121
	18:00-18:15	100	101
D - Whaddon Rd	16:45-17:00	297	301
	17:00-17:15	355	360
	17:15-17:30	435	440
	17:30-17:45	435	440
	17:45-18:00	355	360
	18:00-18:15	297	301

Results

Results Summary for whole modelled period

Stream	Max RFC	Max Delay (s)	Max Queue (Veh)	Max LOS	Average Demand (Veh/hr)	Total Junction Arrivals (Veh)
B-ACD	1.21	414.19	51.6	F	418	628
A-BCD	0.14	6.09	0.2	A	80	119
A-B					65	98
A-C					74	112
D-ABC	0.95	84.82	9.6	F	362	543
C-ABD	0.03	5.83	0.0	A	17	25
C-D					42	63
C-A					64	96

Main Results for each time segment

16:45 - 17:00

Stream	Total Demand (Veh/hr)	Junction Arrivals (Veh)	Capacity (Veh/hr)	RFC	Throughput (Veh/hr)	Start queue (Veh)	End queue (Veh)	Delay (s)	Unsignalised level of service
B-ACD	343	86	453	0.758	332	0.0	2.8	27.744	D
A-BCD	62	15	661	0.093	61	0.0	0.1	5.995	A
A-B	55	14			55				
A-C	63	16			63				
D-ABC	297	74	494	0.602	291	0.0	1.4	17.326	C
C-ABD	13	3	631	0.021	13	0.0	0.0	5.822	A
C-D	34	9			34				
C-A	53	13			53				

17:00 - 17:15

Stream	Total Demand (Veh/hr)	Junction Arrivals (Veh)	Capacity (Veh/hr)	RFC	Throughput (Veh/hr)	Start queue (Veh)	End queue (Veh)	Delay (s)	Unsignalised level of service
B-ACD	410	102	438	0.935	392	2.8	7.2	61.685	F
A-BCD	77	19	674	0.114	77	0.1	0.2	6.030	A
A-B	64	16			64				
A-C	73	18			73				
D-ABC	355	89	481	0.738	350	1.4	2.6	26.726	D
C-ABD	16	4	634	0.026	16	0.0	0.0	5.825	A
C-D	41	10			41				
C-A	63	16			63				

17:15 - 17:30

Stream	Total Demand (Veh/hr)	Junction Arrivals (Veh)	Capacity (Veh/hr)	RFC	Throughput (Veh/hr)	Start queue (Veh)	End queue (Veh)	Delay (s)	Unsignalised level of service
B-ACD	502	126	418	1.202	412	7.2	29.7	182.758	F
A-BCD	100	25	692	0.145	100	0.2	0.2	6.081	A
A-B	76	19			76				
A-C	87	22			87				
D-ABC	435	109	462	0.941	415	2.6	7.5	59.875	F
C-ABD	21	5	638	0.033	21	0.0	0.0	5.829	A
C-D	50	12			50				
C-A	76	19			76				

17:30 - 17:45

Stream	Total Demand (Veh/hr)	Junction Arrivals (Veh)	Capacity (Veh/hr)	RFC	Throughput (Veh/hr)	Start queue (Veh)	End queue (Veh)	Delay (s)	Unsignalised level of service
B-ACD	502	126	416	1.208	415	29.7	51.6	365.402	F
A-BCD	100	25	692	0.145	100	0.2	0.2	6.087	A
A-B	76	19			76				
A-C	87	22			87				
D-ABC	435	109	458	0.948	426	7.5	9.6	84.825	F
C-ABD	21	5	638	0.033	21	0.0	0.0	5.833	A
C-D	50	12			50				
C-A	76	19			76				

17:45 - 18:00

Stream	Total Demand (Veh/hr)	Junction Arrivals (Veh)	Capacity (Veh/hr)	RFC	Throughput (Veh/hr)	Start queue (Veh)	End queue (Veh)	Delay (s)	Unsignalised level of service
B-ACD	410	102	435	0.942	427	51.6	47.3	414.185	F
A-BCD	77	19	674	0.114	77	0.2	0.2	6.034	A
A-B	64	16			64				
A-C	73	18			73				
D-ABC	355	89	474	0.749	380	9.6	3.4	44.576	E
C-ABD	16	4	634	0.026	16	0.0	0.0	5.832	A
C-D	41	10			41				
C-A	63	16			63				

18:00 - 18:15

Stream	Total Demand (Veh/hr)	Junction Arrivals (Veh)	Capacity (Veh/hr)	RFC	Throughput (Veh/hr)	Start queue (Veh)	End queue (Veh)	Delay (s)	Unsignalised level of service
B-ACD	343	86	452	0.760	443	47.3	22.5	289.138	F
A-BCD	62	15	661	0.093	62	0.2	0.1	6.010	A
A-B	55	14			55				
A-C	63	16			63				
D-ABC	297	74	488	0.609	304	3.4	1.6	20.274	C
C-ABD	13	3	631	0.021	13	0.0	0.0	5.826	A
C-D	34	9			34				
C-A	53	13			53				

2033 Base + CD + D with TP, AM

Data Errors and Warnings

No errors or warnings

Junction Network

Junctions

Junction	Name	Junction type	Major road direction	Use circulating lanes	Junction Delay (s)	Junction LOS
J3	Bletchley Road/ Stoke Road/ Drayton Road/ Whaddon Road	Crossroads	Two-way		238.23	F

Junction Network Options

Driving side	Lighting
Left	Normal/unknown

Traffic Demand

Demand Set Details

ID	Scenario name	Time Period name	Traffic profile type	Start time (HH:mm)	Finish time (HH:mm)	Time segment length (min)	Run automatically
D17	2033 Base + CD + D with TP	AM	ONE HOUR	07:30	09:00	15	✓

Vehicle mix varies over turn	Vehicle mix varies over entry	Vehicle mix source	PCU Factor for a HV (PCU)
✓	✓	HV Percentages	2.00

Demand overview (Traffic)

Arm	Linked arm	Profile type	Use O-D data	Average Demand (Veh/hr)	Scaling Factor (%)
A - Bletchley Rd		ONE HOUR	✓	244	100.000
B - Stoke Rd		ONE HOUR	✓	474	100.000
C - Drayton Rd		ONE HOUR	✓	185	100.000
D - Whaddon Rd		ONE HOUR	✓	407	100.000

Origin-Destination Data

Demand (Veh/hr)

		To			
		A - Bletchley Rd	B - Stoke Rd	C - Drayton Rd	D - Whaddon Rd
From	A - Bletchley Rd	0	133	79	32
	B - Stoke Rd	111	0	30	333
	C - Drayton Rd	112	28	0	45
	D - Whaddon Rd	56	305	45	0

Proportions

		To			
		A - Bletchley Rd	B - Stoke Rd	C - Drayton Rd	D - Whaddon Rd
From	A - Bletchley Rd	0.00	0.54	0.32	0.13
	B - Stoke Rd	0.23	0.00	0.06	0.70
	C - Drayton Rd	0.61	0.15	0.00	0.24
	D - Whaddon Rd	0.14	0.75	0.11	0.00

Vehicle Mix

Heavy Vehicle Percentages

		To			
		A - Bletchley Rd	B - Stoke Rd	C - Drayton Rd	D - Whaddon Rd
From	A - Bletchley Rd	0	2	1	4
	B - Stoke Rd	2	0	0	2
	C - Drayton Rd	1	0	0	3
	D - Whaddon Rd	0	3	11	0

Average PCU Per Veh

		To			
		A - Bletchley Rd	B - Stoke Rd	C - Drayton Rd	D - Whaddon Rd
From	A - Bletchley Rd	1.000	1.017	1.014	1.036
	B - Stoke Rd	1.021	1.000	1.000	1.015
	C - Drayton Rd	1.010	1.000	1.000	1.033
	D - Whaddon Rd	1.000	1.026	1.107	1.000

Detailed Demand Data

Demand for each time segment

Arm	Time Segment	Demand (Veh/hr)	Demand in PCU (PCU/hr)
A - Bletchley Rd	07:30-07:45	184	187
	07:45-08:00	220	224
	08:00-08:15	269	274
	08:15-08:30	269	274
	08:30-08:45	220	224
	08:45-09:00	184	187
B - Stoke Rd	07:30-07:45	357	362
	07:45-08:00	426	433
	08:00-08:15	522	530
	08:15-08:30	522	530
	08:30-08:45	426	433
	08:45-09:00	357	362
C - Drayton Rd	07:30-07:45	139	141
	07:45-08:00	166	169
	08:00-08:15	204	206
	08:15-08:30	204	206
	08:30-08:45	166	169
	08:45-09:00	139	141
D - Whaddon Rd	07:30-07:45	306	316
	07:45-08:00	365	377
	08:00-08:15	448	462
	08:15-08:30	448	462
	08:30-08:45	365	377
	08:45-09:00	306	316

Results

Results Summary for whole modelled period

Stream	Max RFC	Max Delay (s)	Max Queue (Veh)	Max LOS	Average Demand (Veh/hr)	Total Junction Arrivals (Veh)
B-ACD	1.27	545.92	65.0	F	435	652
A-BCD	0.08	5.71	0.1	A	42	63
A-B					114	172
A-C					68	102
D-ABC	1.02	131.96	16.2	F	373	560
C-ABD	0.06	5.75	0.1	A	33	49
C-D					39	59
C-A					98	147

Main Results for each time segment

07:30 - 07:45

Stream	Total Demand (Veh/hr)	Junction Arrivals (Veh)	Capacity (Veh/hr)	RFC	Throughput (Veh/hr)	Start queue (Veh)	End queue (Veh)	Delay (s)	Unsignalised level of service
B-ACD	357	89	451	0.792	344	0.0	3.2	30.870	D
A-BCD	32	8	663	0.048	32	0.0	0.1	5.702	A
A-B	95	24			95				
A-C	57	14			57				
D-ABC	306	77	482	0.635	299	0.0	1.6	19.137	C
C-ABD	25	6	652	0.039	25	0.0	0.1	5.737	A
C-D	33	8			33				
C-A	81	20			81				

07:45 - 08:00

Stream	Total Demand (Veh/hr)	Junction Arrivals (Veh)	Capacity (Veh/hr)	RFC	Throughput (Veh/hr)	Start queue (Veh)	End queue (Veh)	Delay (s)	Unsignalised level of service
B-ACD	426	107	435	0.979	402	3.2	9.3	75.202	F
A-BCD	40	10	678	0.059	40	0.1	0.1	5.646	A
A-B	112	28			112				
A-C	67	17			67				
D-ABC	365	91	467	0.783	359	1.6	3.1	31.776	D
C-ABD	32	8	659	0.048	31	0.1	0.1	5.733	A
C-D	38	10			38				
C-A	96	24			96				

08:00 - 08:15

Stream	Total Demand (Veh/hr)	Junction Arrivals (Veh)	Capacity (Veh/hr)	RFC	Throughput (Veh/hr)	Start queue (Veh)	End queue (Veh)	Delay (s)	Unsignalised level of service
B-ACD	522	130	414	1.260	411	9.3	37.1	224.721	F
A-BCD	53	13	700	0.076	53	0.1	0.1	5.570	A
A-B	135	34			135				
A-C	80	20			80				
D-ABC	448	112	446	1.004	416	3.1	10.9	80.397	F
C-ABD	41	10	670	0.061	41	0.1	0.1	5.726	A
C-D	46	12			46				
C-A	116	29			116				

08:15 - 08:30

Stream	Total Demand (Veh/hr)	Junction Arrivals (Veh)	Capacity (Veh/hr)	RFC	Throughput (Veh/hr)	Start queue (Veh)	End queue (Veh)	Delay (s)	Unsignalised level of service
B-ACD	522	130	411	1.268	411	37.1	64.9	456.277	F
A-BCD	53	13	700	0.076	53	0.1	0.1	5.568	A
A-B	135	34			135				
A-C	80	20			80				
D-ABC	448	112	440	1.016	426	10.9	16.2	131.957	F
C-ABD	41	10	670	0.061	41	0.1	0.1	5.730	A
C-D	46	12			46				
C-A	116	29			116				

08:30 - 08:45

Stream	Total Demand (Veh/hr)	Junction Arrivals (Veh)	Capacity (Veh/hr)	RFC	Throughput (Veh/hr)	Start queue (Veh)	End queue (Veh)	Delay (s)	Unsignalised level of service
B-ACD	426	107	431	0.989	426	64.9	65.0	545.917	F
A-BCD	40	10	678	0.059	40	0.1	0.1	5.643	A
A-B	112	28			112				
A-C	67	17			67				
D-ABC	365	91	456	0.802	410	16.2	5.1	87.625	F
C-ABD	32	8	659	0.048	32	0.1	0.1	5.741	A
C-D	38	10			38				
C-A	96	24			96				

08:45 - 09:00

Stream	Total Demand (Veh/hr)	Junction Arrivals (Veh)	Capacity (Veh/hr)	RFC	Throughput (Veh/hr)	Start queue (Veh)	End queue (Veh)	Delay (s)	Unsignalised level of service
B-ACD	357	89	449	0.795	442	65.0	43.7	445.116	F
A-BCD	32	8	663	0.048	32	0.1	0.1	5.707	A
A-B	95	24			95				
A-C	57	14			57				
D-ABC	306	77	471	0.650	319	5.1	2.0	25.325	D
C-ABD	25	6	652	0.039	25	0.1	0.1	5.747	A
C-D	33	8			33				
C-A	81	20			81				

2033 Base + CD + D with TP, PM

Data Errors and Warnings

No errors or warnings

Junction Network

Junctions

Junction	Name	Junction type	Major road direction	Use circulating lanes	Junction Delay (s)	Junction LOS
J3	Bletchley Road/ Stoke Road/ Drayton Road/ Whaddon Road	Crossroads	Two-way		161.32	F

Junction Network Options

Driving side	Lighting
Left	Normal/unknown

Traffic Demand

Demand Set Details

ID	Scenario name	Time Period name	Traffic profile type	Start time (HH:mm)	Finish time (HH:mm)	Time segment length (min)	Run automatically
D18	2033 Base + CD + D with TP	PM	ONE HOUR	16:45	18:15	15	✓

Vehicle mix varies over turn	Vehicle mix varies over entry	Vehicle mix source	PCU Factor for a HV (PCU)
✓	✓	HV Percentages	2.00

Demand overview (Traffic)

Arm	Linked arm	Profile type	Use O-D data	Average Demand (Veh/hr)	Scaling Factor (%)
A - Bletchley Rd		ONE HOUR	✓	239	100.000
B - Stoke Rd		ONE HOUR	✓	449	100.000
C - Drayton Rd		ONE HOUR	✓	131	100.000
D - Whaddon Rd		ONE HOUR	✓	387	100.000

Origin-Destination Data

Demand (Veh/hr)

		To			
		A - Bletchley Rd	B - Stoke Rd	C - Drayton Rd	D - Whaddon Rd
From	A - Bletchley Rd	0	81	92	66
	B - Stoke Rd	123	0	31	294
	C - Drayton Rd	72	15	0	44
	D - Whaddon Rd	42	310	35	0

Proportions

		To			
		A - Bletchley Rd	B - Stoke Rd	C - Drayton Rd	D - Whaddon Rd
From	A - Bletchley Rd	0.00	0.34	0.39	0.28
	B - Stoke Rd	0.28	0.00	0.07	0.66
	C - Drayton Rd	0.55	0.11	0.00	0.34
	D - Whaddon Rd	0.11	0.80	0.09	0.00

Vehicle Mix

Heavy Vehicle Percentages

		To			
		A - Bletchley Rd	B - Stoke Rd	C - Drayton Rd	D - Whaddon Rd
From	A - Bletchley Rd	0	3	0	2
	B - Stoke Rd	1	0	0	2
	C - Drayton Rd	2	0	0	0
	D - Whaddon Rd	0	2	0	0

Average PCU Per Veh

		To			
		A - Bletchley Rd	B - Stoke Rd	C - Drayton Rd	D - Whaddon Rd
From	A - Bletchley Rd	1.000	1.029	1.000	1.018
	B - Stoke Rd	1.009	1.000	1.000	1.019
	C - Drayton Rd	1.016	1.000	1.000	1.000
	D - Whaddon Rd	1.000	1.017	1.000	1.000

Detailed Demand Data

Demand for each time segment

Arm	Time Segment	Demand (Veh/hr)	Demand in PCU (PCU/hr)
A - Bletchley Rd	16:45-17:00	180	182
	17:00-17:15	215	218
	17:15-17:30	263	267
	17:30-17:45	263	267
	17:45-18:00	215	218
	18:00-18:15	180	182
B - Stoke Rd	16:45-17:00	338	343
	17:00-17:15	403	409
	17:15-17:30	494	501
	17:30-17:45	494	501
	17:45-18:00	403	409
	18:00-18:15	338	343
C - Drayton Rd	16:45-17:00	98	99
	17:00-17:15	118	119
	17:15-17:30	144	145
	17:30-17:45	144	145
	17:45-18:00	118	119
	18:00-18:15	98	99
D - Whaddon Rd	16:45-17:00	291	295
	17:00-17:15	348	353
	17:15-17:30	426	432
	17:30-17:45	426	432
	17:45-18:00	348	353
	18:00-18:15	291	295

Results

Results Summary for whole modelled period

Stream	Max RFC	Max Delay (s)	Max Queue (Veh)	Max LOS	Average Demand (Veh/hr)	Total Junction Arrivals (Veh)
B-ACD	1.19	367.91	46.8	F	412	618
A-BCD	0.14	6.08	0.2	A	80	119
A-B					65	98
A-C					74	112
D-ABC	0.93	73.88	8.1	F	355	533
C-ABD	0.03	5.85	0.0	A	17	25
C-D					40	59
C-A					64	96

Main Results for each time segment

16:45 - 17:00

Stream	Total Demand (Veh/hr)	Junction Arrivals (Veh)	Capacity (Veh/hr)	RFC	Throughput (Veh/hr)	Start queue (Veh)	End queue (Veh)	Delay (s)	Unsignalised level of service
B-ACD	338	84	454	0.745	327	0.0	2.6	26.713	D
A-BCD	62	15	662	0.093	61	0.0	0.1	5.991	A
A-B	55	14			55				
A-C	63	16			63				
D-ABC	291	73	495	0.589	286	0.0	1.4	16.832	C
C-ABD	13	3	630	0.021	13	0.0	0.0	5.833	A
C-D	33	8			33				
C-A	53	13			53				

17:00 - 17:15

Stream	Total Demand (Veh/hr)	Junction Arrivals (Veh)	Capacity (Veh/hr)	RFC	Throughput (Veh/hr)	Start queue (Veh)	End queue (Veh)	Delay (s)	Unsignalised level of service
B-ACD	403	101	439	0.919	388	2.6	6.5	57.410	F
A-BCD	77	19	675	0.114	77	0.1	0.2	6.025	A
A-B	64	16			64				
A-C	73	18			73				
D-ABC	348	87	482	0.723	344	1.4	2.4	25.392	D
C-ABD	16	4	633	0.026	16	0.0	0.0	5.839	A
C-D	39	10			39				
C-A	63	16			63				

17:15 - 17:30

Stream	Total Demand (Veh/hr)	Junction Arrivals (Veh)	Capacity (Veh/hr)	RFC	Throughput (Veh/hr)	Start queue (Veh)	End queue (Veh)	Delay (s)	Unsignalised level of service
B-ACD	494	123	418	1.181	411	6.5	27.1	168.892	F
A-BCD	100	25	693	0.145	100	0.2	0.2	6.075	A
A-B	76	19			76				
A-C	87	22			87				
D-ABC	426	107	463	0.920	409	2.4	6.6	54.563	F
C-ABD	21	5	636	0.033	21	0.0	0.0	5.846	A
C-D	47	12			47				
C-A	76	19			76				

17:30 - 17:45

Stream	Total Demand (Veh/hr)	Junction Arrivals (Veh)	Capacity (Veh/hr)	RFC	Throughput (Veh/hr)	Start queue (Veh)	End queue (Veh)	Delay (s)	Unsignalised level of service
B-ACD	494	123	417	1.186	415	27.1	46.8	334.051	F
A-BCD	100	25	693	0.145	100	0.2	0.2	6.081	A
A-B	76	19			76				
A-C	87	22			87				
D-ABC	426	107	460	0.926	420	6.6	8.1	73.876	F
C-ABD	21	5	636	0.033	21	0.0	0.0	5.848	A
C-D	47	12			47				
C-A	76	19			76				

17:45 - 18:00

Stream	Total Demand (Veh/hr)	Junction Arrivals (Veh)	Capacity (Veh/hr)	RFC	Throughput (Veh/hr)	Start queue (Veh)	End queue (Veh)	Delay (s)	Unsignalised level of service
B-ACD	403	101	436	0.924	427	46.8	40.8	367.909	F
A-BCD	77	19	675	0.114	77	0.2	0.2	6.032	A
A-B	64	16			64				
A-C	73	18			73				
D-ABC	348	87	476	0.732	369	8.1	3.0	38.003	E
C-ABD	16	4	632	0.026	16	0.0	0.0	5.843	A
C-D	39	10			39				
C-A	63	16			63				

18:00 - 18:15

Stream	Total Demand (Veh/hr)	Junction Arrivals (Veh)	Capacity (Veh/hr)	RFC	Throughput (Veh/hr)	Start queue (Veh)	End queue (Veh)	Delay (s)	Unsignalised level of service
B-ACD	338	84	452	0.747	442	40.8	14.9	234.051	F
A-BCD	62	15	662	0.093	62	0.2	0.1	6.006	A
A-B	55	14			55				
A-C	63	16			63				
D-ABC	291	73	490	0.595	297	3.0	1.5	19.249	C
C-ABD	13	3	630	0.021	13	0.0	0.0	5.837	A
C-D	33	8			33				
C-A	53	13			53				

2033 Base + CD + D - ST, AM

Data Errors and Warnings

No errors or warnings

Junction Network

Junctions

Junction	Name	Junction type	Major road direction	Use circulating lanes	Junction Delay (s)	Junction LOS
J3	Bletchley Road/ Stoke Road/ Drayton Road/ Whaddon Road	Crossroads	Two-way		288.67	F

Junction Network Options

Driving side	Lighting
Left	Normal/unknown

Traffic Demand

Demand Set Details

ID	Scenario name	Time Period name	Traffic profile type	Start time (HH:mm)	Finish time (HH:mm)	Time segment length (min)	Run automatically
D19	2033 Base + CD + D - ST	AM	ONE HOUR	07:30	09:00	15	✓

Vehicle mix varies over turn	Vehicle mix varies over entry	Vehicle mix source	PCU Factor for a HV (PCU)
✓	✓	HV Percentages	2.00

Demand overview (Traffic)

Arm	Linked arm	Profile type	Use O-D data	Average Demand (Veh/hr)	Scaling Factor (%)
A - Bletchley Rd		ONE HOUR	✓	244	100.000
B - Stoke Rd		ONE HOUR	✓	483	100.000
C - Drayton Rd		ONE HOUR	✓	189	100.000
D - Whaddon Rd		ONE HOUR	✓	431	100.000

Origin-Destination Data

Demand (Veh/hr)

		To			
		A - Bletchley Rd	B - Stoke Rd	C - Drayton Rd	D - Whaddon Rd
From	A - Bletchley Rd	0	133	79	32
	B - Stoke Rd	111	0	30	342
	C - Drayton Rd	112	28	0	49
	D - Whaddon Rd	56	323	51	0

Proportions

		To			
		A - Bletchley Rd	B - Stoke Rd	C - Drayton Rd	D - Whaddon Rd
From	A - Bletchley Rd	0.00	0.54	0.32	0.13
	B - Stoke Rd	0.23	0.00	0.06	0.71
	C - Drayton Rd	0.59	0.15	0.00	0.26
	D - Whaddon Rd	0.13	0.75	0.12	0.00

Vehicle Mix

Heavy Vehicle Percentages

		To			
		A - Bletchley Rd	B - Stoke Rd	C - Drayton Rd	D - Whaddon Rd
From	A - Bletchley Rd	0	2	1	4
	B - Stoke Rd	2	0	0	2
	C - Drayton Rd	1	0	0	3
	D - Whaddon Rd	0	3	11	0

Average PCU Per Veh

		To			
		A - Bletchley Rd	B - Stoke Rd	C - Drayton Rd	D - Whaddon Rd
From	A - Bletchley Rd	1.000	1.017	1.014	1.036
	B - Stoke Rd	1.021	1.000	1.000	1.015
	C - Drayton Rd	1.010	1.000	1.000	1.033
	D - Whaddon Rd	1.000	1.026	1.107	1.000

Detailed Demand Data

Demand for each time segment

Arm	Time Segment	Demand (Veh/hr)	Demand in PCU (PCU/hr)
A - Bletchley Rd	07:30-07:45	184	187
	07:45-08:00	220	224
	08:00-08:15	269	274
	08:15-08:30	269	274
	08:30-08:45	220	224
	08:45-09:00	184	187
B - Stoke Rd	07:30-07:45	363	369
	07:45-08:00	434	441
	08:00-08:15	532	540
	08:15-08:30	532	540
	08:30-08:45	434	441
	08:45-09:00	363	369
C - Drayton Rd	07:30-07:45	143	145
	07:45-08:00	170	173
	08:00-08:15	208	212
	08:15-08:30	208	212
	08:30-08:45	170	173
	08:45-09:00	143	145
D - Whaddon Rd	07:30-07:45	324	335
	07:45-08:00	387	400
	08:00-08:15	474	490
	08:15-08:30	474	490
	08:30-08:45	387	400
	08:45-09:00	324	335

Results

Results Summary for whole modelled period

Stream	Max RFC	Max Delay (s)	Max Queue (Veh)	Max LOS	Average Demand (Veh/hr)	Total Junction Arrivals (Veh)
B-ACD	1.30	627.66	75.1	F	443	665
A-BCD	0.08	5.71	0.1	A	42	63
A-B					114	172
A-C					68	102
D-ABC	1.09	200.15	27.3	F	395	593
C-ABD	0.06	5.73	0.1	A	33	49
C-D					43	65
C-A					98	147

Main Results for each time segment

07:30 - 07:45

Stream	Total Demand (Veh/hr)	Junction Arrivals (Veh)	Capacity (Veh/hr)	RFC	Throughput (Veh/hr)	Start queue (Veh)	End queue (Veh)	Delay (s)	Unsignalised level of service
B-ACD	363	91	449	0.809	349	0.0	3.5	32.654	D
A-BCD	32	8	662	0.048	32	0.0	0.1	5.708	A
A-B	95	24			95				
A-C	57	14			57				
D-ABC	324	81	479	0.677	316	0.0	1.9	21.239	C
C-ABD	25	6	655	0.039	25	0.0	0.1	5.718	A
C-D	36	9			36				
C-A	81	20			81				

07:45 - 08:00

Stream	Total Demand (Veh/hr)	Junction Arrivals (Veh)	Capacity (Veh/hr)	RFC	Throughput (Veh/hr)	Start queue (Veh)	End queue (Veh)	Delay (s)	Unsignalised level of service
B-ACD	434	109	434	1.001	405	3.5	10.7	83.253	F
A-BCD	40	10	677	0.059	40	0.1	0.1	5.651	A
A-B	112	28			112				
A-C	67	17			67				
D-ABC	387	97	464	0.834	379	1.9	4.1	38.653	E
C-ABD	32	8	662	0.048	32	0.1	0.1	5.708	A
C-D	42	11			42				
C-A	96	24			96				

08:00 - 08:15

Stream	Total Demand (Veh/hr)	Junction Arrivals (Veh)	Capacity (Veh/hr)	RFC	Throughput (Veh/hr)	Start queue (Veh)	End queue (Veh)	Delay (s)	Unsignalised level of service
B-ACD	532	133	412	1.291	409	10.7	41.4	250.130	F
A-BCD	53	13	699	0.076	53	0.1	0.1	5.579	A
A-B	135	34			135				
A-C	80	20			80				
D-ABC	474	119	442	1.072	425	4.1	16.3	107.877	F
C-ABD	41	10	673	0.061	41	0.1	0.1	5.699	A
C-D	51	13			51				

08:15 - 08:30

Stream	Total Demand (Veh/hr)	Junction Arrivals (Veh)	Capacity (Veh/hr)	RFC	Throughput (Veh/hr)	Start queue (Veh)	End queue (Veh)	Delay (s)	Unsignalised level of service
B-ACD	532	133	407	1.305	407	41.4	72.6	511.628	F
A-BCD	53	13	699	0.076	53	0.1	0.1	5.577	A
A-B	135	34			135				
A-C	80	20			80				
D-ABC	474	119	436	1.088	430	16.3	27.3	200.153	F
C-ABD	41	10	673	0.061	41	0.1	0.1	5.701	A
C-D	51	13			51				
C-A	116	29			116				

08:30 - 08:45

Stream	Total Demand (Veh/hr)	Junction Arrivals (Veh)	Capacity (Veh/hr)	RFC	Throughput (Veh/hr)	Start queue (Veh)	End queue (Veh)	Delay (s)	Unsignalised level of service
B-ACD	434	109	425	1.020	424	72.6	75.1	627.656	F
A-BCD	40	10	678	0.060	40	0.1	0.1	5.652	A
A-B	112	28			112				
A-C	67	17			67				
D-ABC	387	97	450	0.860	434	27.3	15.4	182.031	F
C-ABD	32	8	662	0.048	32	0.1	0.1	5.718	A
C-D	42	11			42				
C-A	96	24			96				

08:45 - 09:00

Stream	Total Demand (Veh/hr)	Junction Arrivals (Veh)	Capacity (Veh/hr)	RFC	Throughput (Veh/hr)	Start queue (Veh)	End queue (Veh)	Delay (s)	Unsignalised level of service
B-ACD	363	91	445	0.818	439	75.1	56.3	541.048	F
A-BCD	32	8	662	0.048	32	0.1	0.1	5.714	A
A-B	95	24			95				
A-C	57	14			57				
D-ABC	324	81	465	0.697	376	15.4	2.6	54.501	F
C-ABD	26	6	655	0.039	26	0.1	0.1	5.728	A
C-D	36	9			36				
C-A	81	20			81				

2033 Base + CD + D - ST, PM

Data Errors and Warnings

No errors or warnings

Junction Network

Junctions

Junction	Name	Junction type	Major road direction	Use circulating lanes	Junction Delay (s)	Junction LOS
J3	Bletchley Road/ Stoke Road/ Drayton Road/ Whaddon Road	Crossroads	Two-way		211.59	F

Junction Network Options

Driving side	Lighting
Left	Normal/unknown

Traffic Demand

Demand Set Details

ID	Scenario name	Time Period name	Traffic profile type	Start time (HH:mm)	Finish time (HH:mm)	Time segment length (min)	Run automatically
D20	2033 Base + CD + D - ST	PM	ONE HOUR	16:45	18:15	15	✓

Vehicle mix varies over turn	Vehicle mix varies over entry	Vehicle mix source	PCU Factor for a HV (PCU)
✓	✓	HV Percentages	2.00

Demand overview (Traffic)

Arm	Linked arm	Profile type	Use O-D data	Average Demand (Veh/hr)	Scaling Factor (%)
A - Bletchley Rd		ONE HOUR	✓	239	100.000
B - Stoke Rd		ONE HOUR	✓	467	100.000
C - Drayton Rd		ONE HOUR	✓	135	100.000
D - Whaddon Rd		ONE HOUR	✓	401	100.000

Origin-Destination Data

Demand (Veh/hr)

		To			
		A - Bletchley Rd	B - Stoke Rd	C - Drayton Rd	D - Whaddon Rd
From	A - Bletchley Rd	0	81	92	66
	B - Stoke Rd	123	0	31	312
	C - Drayton Rd	72	15	0	49
	D - Whaddon Rd	42	321	39	0

Proportions

		To			
		A - Bletchley Rd	B - Stoke Rd	C - Drayton Rd	D - Whaddon Rd
From	A - Bletchley Rd	0.00	0.34	0.39	0.28
	B - Stoke Rd	0.26	0.00	0.07	0.67
	C - Drayton Rd	0.53	0.11	0.00	0.36
	D - Whaddon Rd	0.10	0.80	0.10	0.00

Vehicle Mix

Heavy Vehicle Percentages

		To			
		A - Bletchley Rd	B - Stoke Rd	C - Drayton Rd	D - Whaddon Rd
From	A - Bletchley Rd	0	3	0	2
	B - Stoke Rd	1	0	0	2
	C - Drayton Rd	2	0	0	0
	D - Whaddon Rd	0	2	0	0

Average PCU Per Veh

		To			
		A - Bletchley Rd	B - Stoke Rd	C - Drayton Rd	D - Whaddon Rd
From	A - Bletchley Rd	1.000	1.029	1.000	1.018
	B - Stoke Rd	1.009	1.000	1.000	1.019
	C - Drayton Rd	1.016	1.000	1.000	1.000
	D - Whaddon Rd	1.000	1.017	1.000	1.000

Detailed Demand Data

Demand for each time segment

Arm	Time Segment	Demand (Veh/hr)	Demand in PCU (PCU/hr)
A - Bletchley Rd	16:45-17:00	180	182
	17:00-17:15	215	218
	17:15-17:30	263	267
	17:30-17:45	263	267
	17:45-18:00	215	218
	18:00-18:15	180	182
B - Stoke Rd	16:45-17:00	351	357
	17:00-17:15	420	426
	17:15-17:30	514	521
	17:30-17:45	514	521
	17:45-18:00	420	426
	18:00-18:15	351	357
C - Drayton Rd	16:45-17:00	102	103
	17:00-17:15	121	123
	17:15-17:30	149	150
	17:30-17:45	149	150
	17:45-18:00	121	123
	18:00-18:15	102	103
D - Whaddon Rd	16:45-17:00	302	306
	17:00-17:15	360	365
	17:15-17:30	441	447
	17:30-17:45	441	447
	17:45-18:00	360	365
	18:00-18:15	302	306

Results

Results Summary for whole modelled period

Stream	Max RFC	Max Delay (s)	Max Queue (Veh)	Max LOS	Average Demand (Veh/hr)	Total Junction Arrivals (Veh)
B-ACD	1.24	478.89	58.3	F	428	642
A-BCD	0.14	6.09	0.2	A	80	120
A-B					65	98
A-C					74	112
D-ABC	0.97	95.62	11.2	F	368	552
C-ABD	0.03	5.82	0.0	A	17	25
C-D					43	65
C-A					64	96

Main Results for each time segment

16:45 - 17:00

Stream	Total Demand (Veh/hr)	Junction Arrivals (Veh)	Capacity (Veh/hr)	RFC	Throughput (Veh/hr)	Start queue (Veh)	End queue (Veh)	Delay (s)	Unsignalised level of service
B-ACD	351	88	453	0.776	339	0.0	3.0	29.267	D
A-BCD	62	15	661	0.093	61	0.0	0.1	5.998	A
A-B	55	14			55				
A-C	63	16			63				
D-ABC	302	75	493	0.612	296	0.0	1.5	17.751	C
C-ABD	13	3	632	0.021	13	0.0	0.0	5.813	A
C-D	36	9			36				
C-A	53	13			53				

17:00 - 17:15

Stream	Total Demand (Veh/hr)	Junction Arrivals (Veh)	Capacity (Veh/hr)	RFC	Throughput (Veh/hr)	Start queue (Veh)	End queue (Veh)	Delay (s)	Unsignalised level of service
B-ACD	420	105	438	0.958	399	3.0	8.2	68.134	F
A-BCD	77	19	674	0.114	77	0.1	0.2	6.034	A
A-B	64	16			64				
A-C	73	18			73				
D-ABC	360	90	480	0.752	356	1.5	2.7	27.917	D
C-ABD	16	4	635	0.026	16	0.0	0.0	5.815	A
C-D	43	11			43				
C-A	63	16			63				

17:15 - 17:30

Stream	Total Demand (Veh/hr)	Junction Arrivals (Veh)	Capacity (Veh/hr)	RFC	Throughput (Veh/hr)	Start queue (Veh)	End queue (Veh)	Delay (s)	Unsignalised level of service
B-ACD	514	128	417	1.231	413	8.2	33.5	203.037	F
A-BCD	100	25	692	0.145	100	0.2	0.2	6.085	A
A-B	76	19			76				
A-C	87	22			87				
D-ABC	441	110	461	0.959	419	2.7	8.3	64.740	F
C-ABD	21	5	640	0.033	21	0.0	0.0	5.816	A
C-D	52	13			52				
C-A	76	19			76				

17:30 - 17:45

Stream	Total Demand (Veh/hr)	Junction Arrivals (Veh)	Capacity (Veh/hr)	RFC	Throughput (Veh/hr)	Start queue (Veh)	End queue (Veh)	Delay (s)	Unsignalised level of service
B-ACD	514	128	415	1.238	414	33.5	58.3	409.708	F
A-BCD	100	25	692	0.145	100	0.2	0.2	6.090	A
A-B	76	19			76				
A-C	87	22			87				
D-ABC	441	110	457	0.967	430	8.3	11.2	95.620	F
C-ABD	21	5	640	0.033	21	0.0	0.0	5.820	A
C-D	52	13			52				
C-A	76	19			76				

17:45 - 18:00

Stream	Total Demand (Veh/hr)	Junction Arrivals (Veh)	Capacity (Veh/hr)	RFC	Throughput (Veh/hr)	Start queue (Veh)	End queue (Veh)	Delay (s)	Unsignalised level of service
B-ACD	420	105	435	0.965	427	58.3	56.4	478.889	F
A-BCD	77	19	674	0.114	77	0.2	0.2	6.040	A
A-B	64	16			64				
A-C	73	18			73				
D-ABC	360	90	472	0.764	390	11.2	3.7	52.338	F
C-ABD	16	4	635	0.026	16	0.0	0.0	5.819	A
C-D	43	11			43				
C-A	63	16			63				

18:00 - 18:15

Stream	Total Demand (Veh/hr)	Junction Arrivals (Veh)	Capacity (Veh/hr)	RFC	Throughput (Veh/hr)	Start queue (Veh)	End queue (Veh)	Delay (s)	Unsignalised level of service
B-ACD	351	88	452	0.778	444	56.4	33.3	367.528	F
A-BCD	62	15	661	0.093	62	0.2	0.1	6.011	A
A-B	55	14			55				
A-C	63	16			63				
D-ABC	302	75	486	0.622	310	3.7	1.7	21.324	C
C-ABD	13	3	632	0.021	13	0.0	0.0	5.817	A
C-D	36	9			36				
C-A	53	13			53				

2033 Base + CD + SP (ST), AM

Data Errors and Warnings

No errors or warnings

Junction Network

Junctions

Junction	Name	Junction type	Major road direction	Use circulating lanes	Junction Delay (s)	Junction LOS
J3	Bletchley Road/ Stoke Road/ Drayton Road/ Whaddon Road	Crossroads	Two-way		165.47	F

Junction Network Options

Driving side	Lighting
Left	Normal/unknown

Traffic Demand

Demand Set Details

ID	Scenario name	Time Period name	Traffic profile type	Start time (HH:mm)	Finish time (HH:mm)	Time segment length (min)	Run automatically
D21	2033 Base + CD + SP (ST)	AM	ONE HOUR	07:30	09:00	15	✓

Vehicle mix varies over turn	Vehicle mix varies over entry	Vehicle mix source	PCU Factor for a HV (PCU)
✓	✓	HV Percentages	2.00

Demand overview (Traffic)

Arm	Linked arm	Profile type	Use O-D data	Average Demand (Veh/hr)	Scaling Factor (%)
A - Bletchley Rd		ONE HOUR	✓	244	100.000
B - Stoke Rd		ONE HOUR	✓	452	100.000
C - Drayton Rd		ONE HOUR	✓	178	100.000
D - Whaddon Rd		ONE HOUR	✓	378	100.000

Origin-Destination Data

Demand (Veh/hr)

		To			
		A - Bletchley Rd	B - Stoke Rd	C - Drayton Rd	D - Whaddon Rd
From	A - Bletchley Rd	0	133	79	32
	B - Stoke Rd	111	0	30	311
	C - Drayton Rd	112	28	0	38
	D - Whaddon Rd	56	284	38	0

Proportions

		To			
		A - Bletchley Rd	B - Stoke Rd	C - Drayton Rd	D - Whaddon Rd
From	A - Bletchley Rd	0.00	0.54	0.32	0.13
	B - Stoke Rd	0.25	0.00	0.07	0.69
	C - Drayton Rd	0.63	0.15	0.00	0.21
	D - Whaddon Rd	0.15	0.75	0.10	0.00

Vehicle Mix

Heavy Vehicle Percentages

		To			
		A - Bletchley Rd	B - Stoke Rd	C - Drayton Rd	D - Whaddon Rd
From	A - Bletchley Rd	0	2	1	4
	B - Stoke Rd	2	0	0	2
	C - Drayton Rd	1	0	0	3
	D - Whaddon Rd	0	3	11	0

Average PCU Per Veh

		To			
		A - Bletchley Rd	B - Stoke Rd	C - Drayton Rd	D - Whaddon Rd
From	A - Bletchley Rd	1.000	1.017	1.014	1.036
	B - Stoke Rd	1.021	1.000	1.000	1.015
	C - Drayton Rd	1.010	1.000	1.000	1.033
	D - Whaddon Rd	1.000	1.026	1.107	1.000

Detailed Demand Data

Demand for each time segment

Arm	Time Segment	Demand (Veh/hr)	Demand in PCU (PCU/hr)
A - Bletchley Rd	07:30-07:45	184	187
	07:45-08:00	220	224
	08:00-08:15	269	274
	08:15-08:30	269	274
	08:30-08:45	220	224
	08:45-09:00	184	187
B - Stoke Rd	07:30-07:45	340	345
	07:45-08:00	406	412
	08:00-08:15	497	505
	08:15-08:30	497	505
	08:30-08:45	406	412
	08:45-09:00	340	345
C - Drayton Rd	07:30-07:45	134	136
	07:45-08:00	160	162
	08:00-08:15	196	198
	08:15-08:30	196	198
	08:30-08:45	160	162
	08:45-09:00	134	136
D - Whaddon Rd	07:30-07:45	285	293
	07:45-08:00	340	350
	08:00-08:15	416	429
	08:15-08:30	416	429
	08:30-08:45	340	350
	08:45-09:00	285	293

Results

Results Summary for whole modelled period

Stream	Max RFC	Max Delay (s)	Max Queue (Veh)	Max LOS	Average Demand (Veh/hr)	Total Junction Arrivals (Veh)
B-ACD	1.20	394.88	49.5	F	415	622
A-BCD	0.08	5.69	0.1	A	42	63
A-B					114	172
A-C					68	102
D-ABC	0.93	76.33	8.2	F	347	520
C-ABD	0.06	5.78	0.1	A	32	48
C-D					33	49
C-A					98	147

Main Results for each time segment

07:30 - 07:45

Stream	Total Demand (Veh/hr)	Junction Arrivals (Veh)	Capacity (Veh/hr)	RFC	Throughput (Veh/hr)	Start queue (Veh)	End queue (Veh)	Delay (s)	Unsignalised level of service
B-ACD	340	85	452	0.752	329	0.0	2.7	27.393	D
A-BCD	32	8	664	0.048	32	0.0	0.1	5.691	A
A-B	95	24			95				
A-C	57	14			57				
D-ABC	285	71	486	0.586	279	0.0	1.4	17.022	C
C-ABD	25	6	649	0.039	25	0.0	0.1	5.768	A
C-D	27	7			27				
C-A	81	20			81				

07:45 - 08:00

Stream	Total Demand (Veh/hr)	Junction Arrivals (Veh)	Capacity (Veh/hr)	RFC	Throughput (Veh/hr)	Start queue (Veh)	End queue (Veh)	Delay (s)	Unsignalised level of service
B-ACD	406	102	437	0.929	389	2.7	6.9	60.033	F
A-BCD	40	10	680	0.059	40	0.1	0.1	5.631	A
A-B	112	28			112				
A-C	67	17			67				
D-ABC	340	85	472	0.721	336	1.4	2.4	25.735	D
C-ABD	31	8	655	0.048	31	0.1	0.1	5.768	A
C-D	32	8			32				
C-A	96	24			96				

08:00 - 08:15

Stream	Total Demand (Veh/hr)	Junction Arrivals (Veh)	Capacity (Veh/hr)	RFC	Throughput (Veh/hr)	Start queue (Veh)	End queue (Veh)	Delay (s)	Unsignalised level of service
B-ACD	497	124	417	1.194	410	6.9	28.6	177.429	F
A-BCD	53	13	702	0.076	53	0.1	0.1	5.556	A
A-B	135	34			135				
A-C	81	20			81				
D-ABC	416	104	452	0.921	399	2.4	6.6	55.748	F
C-ABD	40	10	664	0.061	40	0.1	0.1	5.771	A
C-D	39	10			39				
C-A	116	29			116				

08:15 - 08:30

Stream	Total Demand (Veh/hr)	Junction Arrivals (Veh)	Capacity (Veh/hr)	RFC	Throughput (Veh/hr)	Start queue (Veh)	End queue (Veh)	Delay (s)	Unsignalised level of service
B-ACD	497	124	415	1.198	414	28.6	49.5	352.773	F
A-BCD	53	13	702	0.076	53	0.1	0.1	5.554	A
A-B	135	34			135				
A-C	80	20			80				
D-ABC	416	104	448	0.929	410	6.6	8.2	76.328	F
C-ABD	40	10	664	0.061	40	0.1	0.1	5.775	A
C-D	39	10			39				
C-A	116	29			116				

08:30 - 08:45

Stream	Total Demand (Veh/hr)	Junction Arrivals (Veh)	Capacity (Veh/hr)	RFC	Throughput (Veh/hr)	Start queue (Veh)	End queue (Veh)	Delay (s)	Unsignalised level of service
B-ACD	406	102	435	0.934	426	49.5	44.5	394.883	F
A-BCD	40	10	680	0.059	40	0.1	0.1	5.632	A
A-B	112	28			112				
A-C	67	17			67				
D-ABC	340	85	464	0.732	361	8.2	3.0	39.432	E
C-ABD	31	8	655	0.048	31	0.1	0.1	5.778	A
C-D	32	8			32				
C-A	96	24			96				

08:45 - 09:00

Stream	Total Demand (Veh/hr)	Junction Arrivals (Veh)	Capacity (Veh/hr)	RFC	Throughput (Veh/hr)	Start queue (Veh)	End queue (Veh)	Delay (s)	Unsignalised level of service
B-ACD	340	85	451	0.754	441	44.5	19.2	265.954	F
A-BCD	32	8	664	0.048	32	0.1	0.1	5.695	A
A-B	95	24			95				
A-C	57	14			57				
D-ABC	285	71	479	0.594	291	3.0	1.5	19.648	C
C-ABD	25	6	649	0.039	25	0.1	0.1	5.778	A
C-D	27	7			27				
C-A	81	20			81				

2033 Base + CD + SP (ST), PM

Data Errors and Warnings

No errors or warnings

Junction Network

Junctions

Junction	Name	Junction type	Major road direction	Use circulating lanes	Junction Delay (s)	Junction LOS
J3	Bletchley Road/ Stoke Road/ Drayton Road/ Whaddon Road	Crossroads	Two-way		103.71	F

Junction Network Options

Driving side	Lighting
Left	Normal/unknown

Traffic Demand

Demand Set Details

ID	Scenario name	Time Period name	Traffic profile type	Start time (HH:mm)	Finish time (HH:mm)	Time segment length (min)	Run automatically
D22	2033 Base + CD + SP (ST)	PM	ONE HOUR	16:45	18:15	15	✓

Vehicle mix varies over turn	Vehicle mix varies over entry	Vehicle mix source	PCU Factor for a HV (PCU)
✓	✓	HV Percentages	2.00

Demand overview (Traffic)

Arm	Linked arm	Profile type	Use O-D data	Average Demand (Veh/hr)	Scaling Factor (%)
A - Bletchley Rd		ONE HOUR	✓	239	100.000
B - Stoke Rd		ONE HOUR	✓	424	100.000
C - Drayton Rd		ONE HOUR	✓	121	100.000
D - Whaddon Rd		ONE HOUR	✓	358	100.000

Origin-Destination Data

Demand (Veh/hr)

		To			
		A - Bletchley Rd	B - Stoke Rd	C - Drayton Rd	D - Whaddon Rd
From	A - Bletchley Rd	0	81	92	66
	B - Stoke Rd	123	0	31	270
	C - Drayton Rd	72	15	0	35
	D - Whaddon Rd	42	289	27	0

Proportions

		To			
		A - Bletchley Rd	B - Stoke Rd	C - Drayton Rd	D - Whaddon Rd
From	A - Bletchley Rd	0.00	0.34	0.39	0.28
	B - Stoke Rd	0.29	0.00	0.07	0.64
	C - Drayton Rd	0.59	0.12	0.00	0.29
	D - Whaddon Rd	0.12	0.81	0.08	0.00

Vehicle Mix

Heavy Vehicle Percentages

		To			
		A - Bletchley Rd	B - Stoke Rd	C - Drayton Rd	D - Whaddon Rd
From	A - Bletchley Rd	0	3	0	2
	B - Stoke Rd	1	0	0	2
	C - Drayton Rd	2	0	0	0
	D - Whaddon Rd	0	2	0	0

Average PCU Per Veh

		To			
		A - Bletchley Rd	B - Stoke Rd	C - Drayton Rd	D - Whaddon Rd
From	A - Bletchley Rd	1.000	1.029	1.000	1.018
	B - Stoke Rd	1.009	1.000	1.000	1.019
	C - Drayton Rd	1.016	1.000	1.000	1.000
	D - Whaddon Rd	1.000	1.017	1.000	1.000

Detailed Demand Data

Demand for each time segment

Arm	Time Segment	Demand (Veh/hr)	Demand in PCU (PCU/hr)
A - Bletchley Rd	16:45-17:00	180	182
	17:00-17:15	215	218
	17:15-17:30	263	267
	17:30-17:45	263	267
	17:45-18:00	215	218
	18:00-18:15	180	182
B - Stoke Rd	16:45-17:00	319	324
	17:00-17:15	381	387
	17:15-17:30	467	474
	17:30-17:45	467	474
	17:45-18:00	381	387
	18:00-18:15	319	324
C - Drayton Rd	16:45-17:00	91	92
	17:00-17:15	109	110
	17:15-17:30	134	135
	17:30-17:45	134	135
	17:45-18:00	109	110
	18:00-18:15	91	92
D - Whaddon Rd	16:45-17:00	269	273
	17:00-17:15	322	326
	17:15-17:30	394	399
	17:30-17:45	394	399
	17:45-18:00	322	326
	18:00-18:15	269	273

Results

Results Summary for whole modelled period

Stream	Max RFC	Max Delay (s)	Max Queue (Veh)	Max LOS	Average Demand (Veh/hr)	Total Junction Arrivals (Veh)
B-ACD	1.11	238.98	32.0	F	389	584
A-BCD	0.14	6.06	0.2	A	80	119
A-B					65	98
A-C					74	112
D-ABC	0.84	45.73	4.7	E	328	492
C-ABD	0.03	5.91	0.0	A	16	25
C-D					31	47
C-A					64	96

Main Results for each time segment

16:45 - 17:00

Stream	Total Demand (Veh/hr)	Junction Arrivals (Veh)	Capacity (Veh/hr)	RFC	Throughput (Veh/hr)	Start queue (Veh)	End queue (Veh)	Delay (s)	Unsignalised level of service
B-ACD	319	80	455	0.701	311	0.0	2.1	23.688	C
A-BCD	62	15	663	0.093	61	0.0	0.1	5.975	A
A-B	55	14			55				
A-C	63	16			63				
D-ABC	269	67	498	0.540	265	0.0	1.1	15.137	C
C-ABD	13	3	625	0.021	13	0.0	0.0	5.878	A
C-D	26	6			26				
C-A	53	13			53				

17:00 - 17:15

Stream	Total Demand (Veh/hr)	Junction Arrivals (Veh)	Capacity (Veh/hr)	RFC	Throughput (Veh/hr)	Start queue (Veh)	End queue (Veh)	Delay (s)	Unsignalised level of service
B-ACD	381	95	441	0.865	371	2.1	4.7	45.565	E
A-BCD	77	19	676	0.114	77	0.1	0.2	6.007	A
A-B	64	16			64				
A-C	74	18			74				
D-ABC	322	80	486	0.662	319	1.1	1.8	21.176	C
C-ABD	16	4	627	0.025	16	0.0	0.0	5.892	A
C-D	31	8			31				
C-A	63	16			63				

17:15 - 17:30

Stream	Total Demand (Veh/hr)	Junction Arrivals (Veh)	Capacity (Veh/hr)	RFC	Throughput (Veh/hr)	Start queue (Veh)	End queue (Veh)	Delay (s)	Unsignalised level of service
B-ACD	467	117	421	1.110	409	4.7	19.4	128.446	F
A-BCD	100	25	695	0.144	100	0.2	0.2	6.051	A
A-B	76	19			76				
A-C	87	22			87				
D-ABC	394	98	468	0.841	384	1.8	4.2	38.959	E
C-ABD	20	5	629	0.032	20	0.0	0.0	5.912	A
C-D	37	9			37				
C-A	76	19			76				

17:30 - 17:45

Stream	Total Demand (Veh/hr)	Junction Arrivals (Veh)	Capacity (Veh/hr)	RFC	Throughput (Veh/hr)	Start queue (Veh)	End queue (Veh)	Delay (s)	Unsignalised level of service
B-ACD	467	117	420	1.112	416	19.4	32.0	238.981	F
A-BCD	100	25	695	0.144	100	0.2	0.2	6.056	A
A-B	76	19			76				
A-C	87	22			87				
D-ABC	394	98	467	0.844	392	4.2	4.7	45.730	E
C-ABD	20	5	629	0.032	20	0.0	0.0	5.914	A
C-D	37	9			37				
C-A	76	19			76				

17:45 - 18:00

Stream	Total Demand (Veh/hr)	Junction Arrivals (Veh)	Capacity (Veh/hr)	RFC	Throughput (Veh/hr)	Start queue (Veh)	End queue (Veh)	Delay (s)	Unsignalised level of service
B-ACD	381	95	440	0.868	426	32.0	20.8	226.563	F
A-BCD	77	19	677	0.114	77	0.2	0.2	6.011	A
A-B	64	16			64				
A-C	73	18			73				
D-ABC	322	80	483	0.666	332	4.7	2.1	25.227	D
C-ABD	16	4	627	0.025	16	0.0	0.0	5.897	A
C-D	30	8			30				
C-A	63	16			63				

18:00 - 18:15

Stream	Total Demand (Veh/hr)	Junction Arrivals (Veh)	Capacity (Veh/hr)	RFC	Throughput (Veh/hr)	Start queue (Veh)	End queue (Veh)	Delay (s)	Unsignalised level of service
B-ACD	319	80	455	0.703	392	20.8	2.8	82.339	F
A-BCD	62	15	663	0.093	62	0.2	0.1	5.988	A
A-B	55	14			55				
A-C	63	16			63				
D-ABC	269	67	496	0.543	273	2.1	1.2	16.373	C
C-ABD	13	3	625	0.021	13	0.0	0.0	5.884	A
C-D	26	6			26				
C-A	53	13			53				

Junctions 9

PICADY 9 - Priority Intersection Module

Version: 9.5.1.7462
© Copyright TRL Limited, 2019

For sales and distribution information, program advice and maintenance, contact TRL:
+44 (0)1344 379777 software@trl.co.uk www.trlsoftware.co.uk

The users of this computer program for the solution of an engineering problem are in no way relieved of their responsibility for the correctness of the solution

Filename: J4 - Whaddon Road Westbrook End.j9
Path: \\uk.wspgroup.com\central data\Projects\700694xx\70069442 - SWMK - 2020\03 WIP\TP Transport Planning\Incoming\iCRC\200818 - Junction and Mitigation Modelling BC Only\Base\J4
Report generation date: 28/08/2020 14:59:28

»2020 Base, AM
»2020 Base, PM
»2033 Base, AM
»2033 Base, PM
»2033 Base + CD + D, AM
»2033 Base + CD + D, PM
»2033 Base + CD + D with TP, AM
»2033 Base + CD + D with TP, PM
»2033 Base + CD + D - ST, AM
»2033 Base + CD + D - ST, PM
»2033 Base + CD + SP (ST), AM
»2033 Base + CD + SP (ST), PM

Summary of junction performance

	AM					PM				
	Set ID	Queue (Veh)	Delay (s)	RFC	LOS	Set ID	Queue (Veh)	Delay (s)	RFC	LOS
2020 Base										
Stream B-AC	D1	0.2	8.62	0.15	A	D2	0.1	7.61	0.08	A
Stream C-AB		0.2	5.66	0.10	A		0.2	5.38	0.11	A
2033 Base										
Stream B-AC	D13	0.2	9.20	0.18	A	D14	0.1	8.04	0.10	A
Stream C-AB		0.3	5.69	0.13	A		0.3	5.33	0.14	A
2033 Base + CD + D										
Stream B-AC	D15	0.2	9.70	0.19	A	D16	0.1	8.47	0.10	A
Stream C-AB		0.3	5.46	0.14	A		0.3	5.24	0.15	A
2033 Base + CD + D with TP										
Stream B-AC	D17	0.2	9.62	0.19	A	D18	0.1	8.39	0.10	A
Stream C-AB		0.3	5.47	0.14	A		0.3	5.26	0.15	A
2033 Base + CD + D - ST										
Stream B-AC	D19	0.2	9.68	0.19	A	D20	0.1	8.45	0.10	A
Stream C-AB		0.3	5.43	0.14	A		0.4	5.25	0.15	A
2033 Base + CD + SP (ST)										
Stream B-AC	D21	0.2	9.18	0.18	A	D22	0.1	8.02	0.10	A
Stream C-AB		0.3	5.58	0.13	A		0.3	5.34	0.14	A

There are warnings associated with one or more model runs - see the 'Data Errors and Warnings' tables for each Analysis or Demand Set.

Values shown are the highest values encountered over all time segments. Delay is the maximum value of average delay per arriving vehicle.

File summary

File Description

Title	Whaddon Road/ Westbrook End
Location	51°58'34.02"N, 0°46'21.76"W
Site number	4
Date	09/04/2020
Version	
Status	(new file)
Identifier	
Client	
Jobnumber	
Enumerator	CORP\INVN01911
Description	

Units

Distance units	Speed units	Traffic units input	Traffic units results	Flow units	Average delay units	Total delay units	Rate of delay units
m	kph	Veh	Veh	perHour	s	-Min	perMin

Analysis Options

Vehicle length (m)	Calculate Queue Percentiles	Calculate detailed queueing delay	Calculate residual capacity	RFC Threshold	Average Delay threshold (s)	Queue threshold (PCU)
5.75				0.85	36.00	20.00

Demand Set Summary

ID	Scenario name	Time Period name	Traffic profile type	Start time (HH:mm)	Finish time (HH:mm)	Time segment length (min)	Run automatically
D1	2020 Base	AM	ONE HOUR	07:30	09:00	15	✓
D2	2020 Base	PM	ONE HOUR	16:45	18:15	15	✓
D13	2033 Base	AM	ONE HOUR	07:30	09:00	15	✓
D14	2033 Base	PM	ONE HOUR	16:45	18:15	15	✓
D15	2033 Base + CD + D	AM	ONE HOUR	07:30	09:00	15	✓
D16	2033 Base + CD + D	PM	ONE HOUR	16:45	18:15	15	✓
D17	2033 Base + CD + D with TP	AM	ONE HOUR	07:30	09:00	15	✓
D18	2033 Base + CD + D with TP	PM	ONE HOUR	16:45	18:15	15	✓
D19	2033 Base + CD + D - ST	AM	ONE HOUR	07:30	09:00	15	✓
D20	2033 Base + CD + D - ST	PM	ONE HOUR	16:45	18:15	15	✓
D21	2033 Base + CD + SP (ST)	AM	ONE HOUR	07:30	09:00	15	✓
D22	2033 Base + CD + SP (ST)	PM	ONE HOUR	16:45	18:15	15	✓

Analysis Set Details

ID	Include in report	Network flow scaling factor (%)	Network capacity scaling factor (%)
A1	✓	100.000	100.000

2020 Base, AM

Data Errors and Warnings

Severity	Area	Item	Description
Warning	Major arm width	C - Whaddon Road (W) - Major arm geometry	For two-way major roads, please interpret results with caution if the total major carriageway width is less than 6m.

Junction Network

Junctions

Junction	Name	Junction type	Major road direction	Use circulating lanes	Junction Delay (s)	Junction LOS
J4	Whaddon Road/ Westbrook End	T-Junction	Two-way		1.36	A

Junction Network Options

Driving side	Lighting
Left	Normal/unknown

Arms

Arms

Arm	Name	Description	Arm type
A	Whaddon Road (E)		Major
B	Westbrook End		Minor
C	Whaddon Road (W)		Major

Major Arm Geometry

Arm	Width of carriageway (m)	Has kerbed central reserve	Has right turn bay	Visibility for right turn (m)	Blocks?	Blocking queue (PCU)
C - Whaddon Road (W)	5.80			71.9	✓	0.00

Geometries for Arm C are measured opposite Arm B. Geometries for Arm A (if relevant) are measured opposite Arm D.

Minor Arm Geometry

Arm	Minor arm type	Lane width (m)	Visibility to left (m)	Visibility to right (m)
B - Westbrook End	One lane	3.38	24	44

Slope / Intercept / Capacity

Priority Intersection Slopes and Intercepts

Stream	Intercept (Veh/hr)	Slope for A-B	Slope for A-C	Slope for C-A	Slope for C-B
B-A	526	0.097	0.244	0.154	0.349
B-C	676	0.105	0.264	-	-
C-B	616	0.241	0.241	-	-

The slopes and intercepts shown above do NOT include any corrections or adjustments.

Streams may be combined, in which case capacity will be adjusted.

Values are shown for the first time segment only; they may differ for subsequent time segments.

Traffic Demand

Demand Set Details

ID	Scenario name	Time Period name	Traffic profile type	Start time (HH:mm)	Finish time (HH:mm)	Time segment length (min)	Run automatically
D1	2020 Base	AM	ONE HOUR	07:30	09:00	15	✓

Vehicle mix varies over turn	Vehicle mix varies over entry	Vehicle mix source	PCU Factor for a HV (PCU)
✓	✓	HV Percentages	2.00

Demand overview (Traffic)

Arm	Linked arm	Profile type	Use O-D data	Average Demand (Veh/hr)	Scaling Factor (%)
A - Whaddon Road (E)		ONE HOUR	✓	335	100.000
B - Westbrook End		ONE HOUR	✓	69	100.000
C - Whaddon Road (W)		ONE HOUR	✓	288	100.000

Origin-Destination Data

Demand (Veh/hr)

		To		
		A - Whaddon Road (E)	B - Westbrook End	C - Whaddon Road (W)
From	A - Whaddon Road (E)	0	17	318
	B - Westbrook End	18	0	51
	C - Whaddon Road (W)	246	42	0

Vehicle Mix

Heavy Vehicle Percentages

		To		
		A - Whaddon Road (E)	B - Westbrook End	C - Whaddon Road (W)
From	A - Whaddon Road (E)	0	0	2
	B - Westbrook End	6	0	0
	C - Whaddon Road (W)	3	0	0

Results

Results Summary for whole modelled period

Stream	Max RFC	Max Delay (s)	Max Queue (Veh)	Max LOS	Average Demand (Veh/hr)	Total Junction Arrivals (Veh)
B-AC	0.15	8.52	0.2	A	63	95
C-AB	0.10	5.66	0.2	A	58	87
C-A					206	309
A-B					16	23
A-C					292	438

Main Results for each time segment

07:30 - 07:45

Stream	Total Demand (Veh/hr)	Junction Arrivals (Veh)	Capacity (Veh/hr)	RFC	Throughput (Veh/hr)	Start queue (Veh)	End queue (Veh)	Delay (s)	Unsignalised level of service
B-AC	52	13	537	0.097	52	0.0	0.1	7.407	A
C-AB	43	11	680	0.064	43	0.0	0.1	5.647	A
C-A	173	43			173				
A-B	13	3			13				
A-C	239	60			239				

07:45 - 08:00

Stream	Total Demand (Veh/hr)	Junction Arrivals (Veh)	Capacity (Veh/hr)	RFC	Throughput (Veh/hr)	Start queue (Veh)	End queue (Veh)	Delay (s)	Unsignalised level of service
B-AC	62	16	521	0.119	62	0.1	0.1	7.841	A
C-AB	56	14	694	0.080	55	0.1	0.1	5.633	A
C-A	203	51			203				
A-B	15	4			15				
A-C	286	71			286				

08:00 - 08:15

Stream	Total Demand (Veh/hr)	Junction Arrivals (Veh)	Capacity (Veh/hr)	RFC	Throughput (Veh/hr)	Start queue (Veh)	End queue (Veh)	Delay (s)	Unsignalised level of service
B-AC	76	19	498	0.152	76	0.1	0.2	8.515	A
C-AB	75	19	715	0.105	74	0.1	0.2	5.620	A
C-A	242	61			242				
A-B	19	5			19				
A-C	350	88			350				

08:15 - 08:30

Stream	Total Demand (Veh/hr)	Junction Arrivals (Veh)	Capacity (Veh/hr)	RFC	Throughput (Veh/hr)	Start queue (Veh)	End queue (Veh)	Delay (s)	Unsignalised level of service
B-AC	76	19	498	0.152	76	0.2	0.2	8.522	A
C-AB	75	19	715	0.105	75	0.2	0.2	5.629	A
C-A	242	61			242				
A-B	19	5			19				
A-C	350	88			350				

08:30 - 08:45

Stream	Total Demand (Veh/hr)	Junction Arrivals (Veh)	Capacity (Veh/hr)	RFC	Throughput (Veh/hr)	Start queue (Veh)	End queue (Veh)	Delay (s)	Unsignalised level of service
B-AC	62	16	521	0.119	62	0.2	0.1	7.850	A
C-AB	56	14	694	0.080	56	0.2	0.1	5.650	A
C-A	203	51			203				
A-B	15	4			15				
A-C	286	71			286				

08:45 - 09:00

Stream	Total Demand (Veh/hr)	Junction Arrivals (Veh)	Capacity (Veh/hr)	RFC	Throughput (Veh/hr)	Start queue (Veh)	End queue (Veh)	Delay (s)	Unsignalised level of service
B-AC	52	13	537	0.097	52	0.1	0.1	7.426	A
C-AB	44	11	680	0.064	44	0.1	0.1	5.662	A
C-A	173	43			173				
A-B	13	3			13				
A-C	239	60			239				

2020 Base, PM

Data Errors and Warnings

Severity	Area	Item	Description
Warning	Major arm width	C - Whaddon Road (W) - Major arm geometry	For two-way major roads, please interpret results with caution if the total major carriageway width is less than 6m.

Junction Network

Junctions

Junction	Name	Junction type	Major road direction	Use circulating lanes	Junction Delay (s)	Junction LOS
J4	Whaddon Road/ Westbrook End	T-Junction	Two-way		1.06	A

Junction Network Options

Driving side	Lighting
Left	Normal/unknown

Traffic Demand

Demand Set Details

ID	Scenario name	Time Period name	Traffic profile type	Start time (HH:mm)	Finish time (HH:mm)	Time segment length (min)	Run automatically
D2	2020 Base	PM	ONE HOUR	16:45	18:15	15	✓

Vehicle mix varies over turn	Vehicle mix varies over entry	Vehicle mix source	PCU Factor for a HV (PCU)
✓	✓	HV Percentages	2.00

Demand overview (Traffic)

Arm	Linked arm	Profile type	Use O-D data	Average Demand (Veh/hr)	Scaling Factor (%)
A - Whaddon Road (E)		ONE HOUR	✓	264	100.000
B - Westbrook End		ONE HOUR	✓	38	100.000
C - Whaddon Road (W)		ONE HOUR	✓	341	100.000

Origin-Destination Data

Demand (Veh/hr)

		To		
		A - Whaddon Road (E)	B - Westbrook End	C - Whaddon Road (W)
From	A - Whaddon Road (E)	0	30	234
	B - Westbrook End	10	0	28
	C - Whaddon Road (W)	296	45	0

Vehicle Mix

Heavy Vehicle Percentages

		To		
		A - Whaddon Road (E)	B - Westbrook End	C - Whaddon Road (W)
From	A - Whaddon Road (E)	0	3	1
	B - Westbrook End	0	0	4
	C - Whaddon Road (W)	1	0	0

Results

Results Summary for whole modelled period

Stream	Max RFC	Max Delay (s)	Max Queue (Veh)	Max LOS	Average Demand (Veh/hr)	Total Junction Arrivals (Veh)
B-AC	0.08	7.61	0.1	A	35	52
C-AB	0.11	5.38	0.2	A	66	99
C-A					247	370
A-B					28	41
A-C					215	322

Main Results for each time segment

16:45 - 17:00

Stream	Total Demand (Veh/hr)	Junction Arrivals (Veh)	Capacity (Veh/hr)	RFC	Throughput (Veh/hr)	Start queue (Veh)	End queue (Veh)	Delay (s)	Unsignalised level of service
B-AC	29	7	547	0.052	28	0.0	0.1	6.941	A
C-AB	49	12	719	0.068	49	0.0	0.1	5.368	A
C-A	208	52			208				
A-B	23	6			23				
A-C	176	44			176				

17:00 - 17:15

Stream	Total Demand (Veh/hr)	Junction Arrivals (Veh)	Capacity (Veh/hr)	RFC	Throughput (Veh/hr)	Start queue (Veh)	End queue (Veh)	Delay (s)	Unsignalised level of service
B-AC	34	9	534	0.064	34	0.1	0.1	7.208	A
C-AB	63	16	741	0.085	63	0.1	0.2	5.314	A
C-A	243	61			243				
A-B	27	7			27				
A-C	210	53			210				

17:15 - 17:30

Stream	Total Demand (Veh/hr)	Junction Arrivals (Veh)	Capacity (Veh/hr)	RFC	Throughput (Veh/hr)	Start queue (Veh)	End queue (Veh)	Delay (s)	Unsignalised level of service
B-AC	42	10	515	0.081	42	0.1	0.1	7.607	A
C-AB	86	22	771	0.112	86	0.2	0.2	5.256	A
C-A	289	72			289				
A-B	33	8			33				
A-C	258	64			258				

17:30 - 17:45

Stream	Total Demand (Veh/hr)	Junction Arrivals (Veh)	Capacity (Veh/hr)	RFC	Throughput (Veh/hr)	Start queue (Veh)	End queue (Veh)	Delay (s)	Unsignalised level of service
B-AC	42	10	515	0.081	42	0.1	0.1	7.607	A
C-AB	86	22	771	0.112	86	0.2	0.2	5.261	A
C-A	289	72			289				
A-B	33	8			33				
A-C	258	64			258				

17:45 - 18:00

Stream	Total Demand (Veh/hr)	Junction Arrivals (Veh)	Capacity (Veh/hr)	RFC	Throughput (Veh/hr)	Start queue (Veh)	End queue (Veh)	Delay (s)	Unsignalised level of service
B-AC	34	9	533	0.064	34	0.1	0.1	7.213	A
C-AB	63	16	741	0.086	64	0.2	0.2	5.323	A
C-A	243	61			243				
A-B	27	7			27				
A-C	210	53			210				

18:00 - 18:15

Stream	Total Demand (Veh/hr)	Junction Arrivals (Veh)	Capacity (Veh/hr)	RFC	Throughput (Veh/hr)	Start queue (Veh)	End queue (Veh)	Delay (s)	Unsignalised level of service
B-AC	29	7	547	0.052	29	0.1	0.1	6.952	A
C-AB	49	12	719	0.069	49	0.2	0.1	5.379	A
C-A	207	52			207				
A-B	23	6			23				
A-C	176	44			176				

2033 Base, AM

Data Errors and Warnings

Severity	Area	Item	Description
Warning	Major arm width	C - Whaddon Road (W) - Major arm geometry	For two-way major roads, please interpret results with caution if the total major carriageway width is less than 6m.

Junction Network

Junctions

Junction	Name	Junction type	Major road direction	Use circulating lanes	Junction Delay (s)	Junction LOS
J4	Whaddon Road/ Westbrook End	T-Junction	Two-way		1.43	A

Junction Network Options

Driving side	Lighting
Left	Normal/unknown

Traffic Demand

Demand Set Details

ID	Scenario name	Time Period name	Traffic profile type	Start time (HH:mm)	Finish time (HH:mm)	Time segment length (min)	Run automatically
D13	2033 Base	AM	ONE HOUR	07:30	09:00	15	✓

Vehicle mix varies over turn	Vehicle mix varies over entry	Vehicle mix source	PCU Factor for a HV (PCU)
✓	✓	HV Percentages	2.00

Demand overview (Traffic)

Arm	Linked arm	Profile type	Use O-D data	Average Demand (Veh/hr)	Scaling Factor (%)
A - Whaddon Road (E)		ONE HOUR	✓	389	100.000
B - Westbrook End		ONE HOUR	✓	79	100.000
C - Whaddon Road (W)		ONE HOUR	✓	346	100.000

Origin-Destination Data

Demand (Veh/hr)

		To		
		A - Whaddon Road (E)	B - Westbrook End	C - Whaddon Road (W)
From	A - Whaddon Road (E)	0	19	370
	B - Westbrook End	21	0	58
	C - Whaddon Road (W)	298	48	0

Vehicle Mix

Heavy Vehicle Percentages

		To		
		A - Whaddon Road (E)	B - Westbrook End	C - Whaddon Road (W)
From	A - Whaddon Road (E)	0	0	2
	B - Westbrook End	6	0	0
	C - Whaddon Road (W)	3	0	0

Results

Results Summary for whole modelled period

Stream	Max RFC	Max Delay (s)	Max Queue (Veh)	Max LOS	Average Demand (Veh/hr)	Total Junction Arrivals (Veh)
B-AC	0.18	9.20	0.2	A	73	109
C-AB	0.13	5.59	0.3	A	73	109
C-A					245	367
A-B					18	27
A-C					339	509

Main Results for each time segment

07:30 - 07:45

Stream	Total Demand (Veh/hr)	Junction Arrivals (Veh)	Capacity (Veh/hr)	RFC	Throughput (Veh/hr)	Start queue (Veh)	End queue (Veh)	Delay (s)	Unsignalised level of service
B-AC	60	15	524	0.114	59	0.0	0.1	7.732	A
C-AB	53	13	698	0.077	53	0.0	0.1	5.577	A
C-A	207	52			207				
A-B	15	4			15				
A-C	278	70			278				

07:45 - 08:00

Stream	Total Demand (Veh/hr)	Junction Arrivals (Veh)	Capacity (Veh/hr)	RFC	Throughput (Veh/hr)	Start queue (Veh)	End queue (Veh)	Delay (s)	Unsignalised level of service
B-AC	71	18	505	0.141	71	0.1	0.2	8.291	A
C-AB	69	17	717	0.097	69	0.1	0.2	5.558	A
C-A	242	60			242				
A-B	18	4			18				
A-C	332	83			332				

08:00 - 08:15

Stream	Total Demand (Veh/hr)	Junction Arrivals (Veh)	Capacity (Veh/hr)	RFC	Throughput (Veh/hr)	Start queue (Veh)	End queue (Veh)	Delay (s)	Unsignalised level of service
B-AC	87	22	478	0.182	87	0.2	0.2	9.191	A
C-AB	95	24	743	0.128	95	0.2	0.3	5.556	A
C-A	286	71			286				
A-B	21	5			21				
A-C	407	102			407				

08:15 - 08:30

Stream	Total Demand (Veh/hr)	Junction Arrivals (Veh)	Capacity (Veh/hr)	RFC	Throughput (Veh/hr)	Start queue (Veh)	End queue (Veh)	Delay (s)	Unsignalised level of service
B-AC	87	22	478	0.182	87	0.2	0.2	9.203	A
C-AB	95	24	743	0.128	95	0.3	0.3	5.565	A
C-A	286	71			286				
A-B	21	5			21				
A-C	407	102			407				

08:30 - 08:45

Stream	Total Demand (Veh/hr)	Junction Arrivals (Veh)	Capacity (Veh/hr)	RFC	Throughput (Veh/hr)	Start queue (Veh)	End queue (Veh)	Delay (s)	Unsignalised level of service
B-AC	71	18	505	0.141	71	0.2	0.2	8.307	A
C-AB	70	17	717	0.097	70	0.3	0.2	5.581	A
C-A	242	60			242				
A-B	18	4			18				
A-C	332	83			332				

08:45 - 09:00

Stream	Total Demand (Veh/hr)	Junction Arrivals (Veh)	Capacity (Veh/hr)	RFC	Throughput (Veh/hr)	Start queue (Veh)	End queue (Veh)	Delay (s)	Unsignalised level of service
B-AC	60	15	524	0.114	60	0.2	0.1	7.755	A
C-AB	54	13	698	0.077	54	0.2	0.1	5.595	A
C-A	207	52			207				
A-B	15	4			15				
A-C	278	70			278				

2033 Base, PM

Data Errors and Warnings

Severity	Area	Item	Description
Warning	Major arm width	C - Whaddon Road (W) - Major arm geometry	For two-way major roads, please interpret results with caution if the total major carriageway width is less than 6m.

Junction Network

Junctions

Junction	Name	Junction type	Major road direction	Use circulating lanes	Junction Delay (s)	Junction LOS
J4	Whaddon Road/ Westbrook End	T-Junction	Two-way		1.10	A

Junction Network Options

Driving side	Lighting
Left	Normal/unknown

Traffic Demand

Demand Set Details

ID	Scenario name	Time Period name	Traffic profile type	Start time (HH:mm)	Finish time (HH:mm)	Time segment length (min)	Run automatically
D14	2033 Base	PM	ONE HOUR	16:45	18:15	15	✓

Vehicle mix varies over turn	Vehicle mix varies over entry	Vehicle mix source	PCU Factor for a HV (PCU)
✓	✓	HV Percentages	2.00

Demand overview (Traffic)

Arm	Linked arm	Profile type	Use O-D data	Average Demand (Veh/hr)	Scaling Factor (%)
A - Whaddon Road (E)		ONE HOUR	✓	318	100.000
B - Westbrook End		ONE HOUR	✓	44	100.000
C - Whaddon Road (W)		ONE HOUR	✓	400	100.000

Origin-Destination Data

Demand (Veh/hr)

		To		
		A - Whaddon Road (E)	B - Westbrook End	C - Whaddon Road (W)
From	A - Whaddon Road (E)	0	35	283
	B - Westbrook End	12	0	32
	C - Whaddon Road (W)	348	52	0

Vehicle Mix

Heavy Vehicle Percentages

		To		
		A - Whaddon Road (E)	B - Westbrook End	C - Whaddon Road (W)
From	A - Whaddon Road (E)	0	3	1
	B - Westbrook End	0	0	4
	C - Whaddon Road (W)	1	0	0

Results

Results Summary for whole modelled period

Stream	Max RFC	Max Delay (s)	Max Queue (Veh)	Max LOS	Average Demand (Veh/hr)	Total Junction Arrivals (Veh)
B-AC	0.10	8.04	0.1	A	40	60
C-AB	0.14	5.33	0.3	A	84	126
C-A					283	425
A-B					32	48
A-C					260	390

Main Results for each time segment

16:45 - 17:00

Stream	Total Demand (Veh/hr)	Junction Arrivals (Veh)	Capacity (Veh/hr)	RFC	Throughput (Veh/hr)	Start queue (Veh)	End queue (Veh)	Delay (s)	Unsignalised level of service
B-AC	33	8	535	0.062	33	0.0	0.1	7.170	A
C-AB	61	15	737	0.082	60	0.0	0.1	5.319	A
C-A	240	60			240				
A-B	26	7			26				
A-C	213	53			213				

17:00 - 17:15

Stream	Total Demand (Veh/hr)	Junction Arrivals (Veh)	Capacity (Veh/hr)	RFC	Throughput (Veh/hr)	Start queue (Veh)	End queue (Veh)	Delay (s)	Unsignalised level of service
B-AC	39	10	519	0.076	39	0.1	0.1	7.513	A
C-AB	79	20	763	0.104	79	0.1	0.2	5.271	A
C-A	280	70			280				
A-B	31	8			31				
A-C	255	64			255				

17:15 - 17:30

Stream	Total Demand (Veh/hr)	Junction Arrivals (Veh)	Capacity (Veh/hr)	RFC	Throughput (Veh/hr)	Start queue (Veh)	End queue (Veh)	Delay (s)	Unsignalised level of service
B-AC	48	12	496	0.097	48	0.1	0.1	8.041	A
C-AB	110	28	799	0.138	110	0.2	0.3	5.226	A
C-A	330	82			330				
A-B	38	10			38				
A-C	312	78			312				

17:30 - 17:45

Stream	Total Demand (Veh/hr)	Junction Arrivals (Veh)	Capacity (Veh/hr)	RFC	Throughput (Veh/hr)	Start queue (Veh)	End queue (Veh)	Delay (s)	Unsignalised level of service
B-AC	48	12	496	0.097	48	0.1	0.1	8.044	A
C-AB	110	28	799	0.138	110	0.3	0.3	5.236	A
C-A	330	82			330				
A-B	38	10			38				
A-C	312	78			312				

17:45 - 18:00

Stream	Total Demand (Veh/hr)	Junction Arrivals (Veh)	Capacity (Veh/hr)	RFC	Throughput (Veh/hr)	Start queue (Veh)	End queue (Veh)	Delay (s)	Unsignalised level of service
B-AC	39	10	518	0.076	40	0.1	0.1	7.520	A
C-AB	80	20	763	0.104	80	0.3	0.2	5.285	A
C-A	280	70			280				
A-B	31	8			31				
A-C	255	64			255				

18:00 - 18:15

Stream	Total Demand (Veh/hr)	Junction Arrivals (Veh)	Capacity (Veh/hr)	RFC	Throughput (Veh/hr)	Start queue (Veh)	End queue (Veh)	Delay (s)	Unsignalised level of service
B-AC	33	8	535	0.062	33	0.1	0.1	7.178	A
C-AB	61	15	737	0.083	61	0.2	0.2	5.333	A
C-A	240	60			240				
A-B	26	7			26				
A-C	213	53			213				

2033 Base + CD + D, AM

Data Errors and Warnings

Severity	Area	Item	Description
Warning	Major arm width	C - Whaddon Road (W) - Major arm geometry	For two-way major roads, please interpret results with caution if the total major carriageway width is less than 6m.

Junction Network

Junctions

Junction	Name	Junction type	Major road direction	Use circulating lanes	Junction Delay (s)	Junction LOS
J4	Whaddon Road/ Westbrook End	T-Junction	Two-way		1.34	A

Junction Network Options

Driving side	Lighting
Left	Normal/unknown

Traffic Demand

Demand Set Details

ID	Scenario name	Time Period name	Traffic profile type	Start time (HH:mm)	Finish time (HH:mm)	Time segment length (min)	Run automatically
D15	2033 Base + CD + D	AM	ONE HOUR	07:30	09:00	15	✓

Vehicle mix varies over turn	Vehicle mix varies over entry	Vehicle mix source	PCU Factor for a HV (PCU)
✓	✓	HV Percentages	2.00

Demand overview (Traffic)

Arm	Linked arm	Profile type	Use O-D data	Average Demand (Veh/hr)	Scaling Factor (%)
A - Whaddon Road (E)		ONE HOUR	✓	439	100.000
B - Westbrook End		ONE HOUR	✓	79	100.000
C - Whaddon Road (W)		ONE HOUR	✓	405	100.000

Origin-Destination Data

Demand (Veh/hr)

		To		
		A - Whaddon Road (E)	B - Westbrook End	C - Whaddon Road (W)
From	A - Whaddon Road (E)	0	19	420
	B - Westbrook End	21	0	58
	C - Whaddon Road (W)	356	48	0

Vehicle Mix

Heavy Vehicle Percentages

		To		
		A - Whaddon Road (E)	B - Westbrook End	C - Whaddon Road (W)
From	A - Whaddon Road (E)	0	0	2
	B - Westbrook End	6	0	0
	C - Whaddon Road (W)	3	0	0

Results

Results Summary for whole modelled period

Stream	Max RFC	Max Delay (s)	Max Queue (Veh)	Max LOS	Average Demand (Veh/hr)	Total Junction Arrivals (Veh)
B-AC	0.19	9.70	0.2	A	73	109
C-AB	0.14	5.45	0.3	A	81	121
C-A					291	436
A-B					18	27
A-C					385	578

Main Results for each time segment

07:30 - 07:45

Stream	Total Demand (Veh/hr)	Junction Arrivals (Veh)	Capacity (Veh/hr)	RFC	Throughput (Veh/hr)	Start queue (Veh)	End queue (Veh)	Delay (s)	Unsignalised level of service
B-AC	60	15	511	0.117	59	0.0	0.1	7.959	A
C-AB	58	14	721	0.080	57	0.0	0.1	5.424	A
C-A	247	62			247				
A-B	15	4			15				
A-C	316	79			316				

07:45 - 08:00

Stream	Total Demand (Veh/hr)	Junction Arrivals (Veh)	Capacity (Veh/hr)	RFC	Throughput (Veh/hr)	Start queue (Veh)	End queue (Veh)	Delay (s)	Unsignalised level of service
B-AC	71	18	489	0.146	71	0.1	0.2	8.610	A
C-AB	76	19	744	0.103	76	0.1	0.2	5.388	A
C-A	287	72			287				
A-B	18	4			18				
A-C	377	94			377				

08:00 - 08:15

Stream	Total Demand (Veh/hr)	Junction Arrivals (Veh)	Capacity (Veh/hr)	RFC	Throughput (Veh/hr)	Start queue (Veh)	End queue (Veh)	Delay (s)	Unsignalised level of service
B-AC	87	22	458	0.190	87	0.2	0.2	9.690	A
C-AB	108	27	778	0.138	107	0.2	0.3	5.366	A
C-A	338	84			338				
A-B	21	5			21				
A-C	462	116			462				

08:15 - 08:30

Stream	Total Demand (Veh/hr)	Junction Arrivals (Veh)	Capacity (Veh/hr)	RFC	Throughput (Veh/hr)	Start queue (Veh)	End queue (Veh)	Delay (s)	Unsignalised level of service
B-AC	87	22	458	0.190	87	0.2	0.2	9.705	A
C-AB	108	27	778	0.138	108	0.3	0.3	5.378	A
C-A	338	84			338				
A-B	21	5			21				
A-C	462	116			462				

08:30 - 08:45

Stream	Total Demand (Veh/hr)	Junction Arrivals (Veh)	Capacity (Veh/hr)	RFC	Throughput (Veh/hr)	Start queue (Veh)	End queue (Veh)	Delay (s)	Unsignalised level of service
B-AC	71	18	489	0.146	71	0.2	0.2	8.628	A
C-AB	77	19	745	0.103	77	0.3	0.2	5.409	A
C-A	287	72			287				
A-B	18	4			18				
A-C	377	94			377				

08:45 - 09:00

Stream	Total Demand (Veh/hr)	Junction Arrivals (Veh)	Capacity (Veh/hr)	RFC	Throughput (Veh/hr)	Start queue (Veh)	End queue (Veh)	Delay (s)	Unsignalised level of service
B-AC	60	15	511	0.117	60	0.2	0.1	7.983	A
C-AB	58	15	721	0.081	58	0.2	0.2	5.446	A
C-A	247	62			247				
A-B	15	4			15				
A-C	316	79			316				

2033 Base + CD + D, PM

Data Errors and Warnings

Severity	Area	Item	Description
Warning	Major arm width	C - Whaddon Road (W) - Major arm geometry	For two-way major roads, please interpret results with caution if the total major carriageway width is less than 6m.

Junction Network

Junctions

Junction	Name	Junction type	Major road direction	Use circulating lanes	Junction Delay (s)	Junction LOS
J4	Whaddon Road/ Westbrook End	T-Junction	Two-way		1.02	A

Junction Network Options

Driving side	Lighting
Left	Normal/unknown

Traffic Demand

Demand Set Details

ID	Scenario name	Time Period name	Traffic profile type	Start time (HH:mm)	Finish time (HH:mm)	Time segment length (min)	Run automatically
D16	2033 Base + CD + D	PM	ONE HOUR	16:45	18:15	15	✓

Vehicle mix varies over turn	Vehicle mix varies over entry	Vehicle mix source	PCU Factor for a HV (PCU)
✓	✓	HV Percentages	2.00

Demand overview (Traffic)

Arm	Linked arm	Profile type	Use O-D data	Average Demand (Veh/hr)	Scaling Factor (%)
A - Whaddon Road (E)		ONE HOUR	✓	380	100.000
B - Westbrook End		ONE HOUR	✓	44	100.000
C - Whaddon Road (W)		ONE HOUR	✓	449	100.000

Origin-Destination Data

Demand (Veh/hr)

		To		
		A - Whaddon Road (E)	B - Westbrook End	C - Whaddon Road (W)
From	A - Whaddon Road (E)	0	35	345
	B - Westbrook End	12	0	32
	C - Whaddon Road (W)	397	52	0

Vehicle Mix

Heavy Vehicle Percentages

		To		
		A - Whaddon Road (E)	B - Westbrook End	C - Whaddon Road (W)
From	A - Whaddon Road (E)	0	3	1
	B - Westbrook End	0	0	4
	C - Whaddon Road (W)	1	0	0

Results

Results Summary for whole modelled period

Stream	Max RFC	Max Delay (s)	Max Queue (Veh)	Max LOS	Average Demand (Veh/hr)	Total Junction Arrivals (Veh)
B-AC	0.10	8.47	0.1	A	40	60
C-AB	0.15	5.24	0.3	A	91	137
C-A					321	481
A-B					32	48
A-C					317	475

Main Results for each time segment

16:45 - 17:00

Stream	Total Demand (Veh/hr)	Junction Arrivals (Veh)	Capacity (Veh/hr)	RFC	Throughput (Veh/hr)	Start queue (Veh)	End queue (Veh)	Delay (s)	Unsignalised level of service
B-AC	33	8	520	0.064	33	0.0	0.1	7.386	A
C-AB	65	16	753	0.086	64	0.0	0.2	5.227	A
C-A	273	68			273				
A-B	26	7			26				
A-C	260	65			260				

17:00 - 17:15

Stream	Total Demand (Veh/hr)	Junction Arrivals (Veh)	Capacity (Veh/hr)	RFC	Throughput (Veh/hr)	Start queue (Veh)	End queue (Veh)	Delay (s)	Unsignalised level of service
B-AC	39	10	501	0.079	39	0.1	0.1	7.802	A
C-AB	86	22	782	0.110	86	0.2	0.2	5.172	A
C-A	317	79			317				
A-B	31	8			31				
A-C	310	78			310				

17:15 - 17:30

Stream	Total Demand (Veh/hr)	Junction Arrivals (Veh)	Capacity (Veh/hr)	RFC	Throughput (Veh/hr)	Start queue (Veh)	End queue (Veh)	Delay (s)	Unsignalised level of service
B-AC	48	12	473	0.102	48	0.1	0.1	8.462	A
C-AB	122	31	825	0.148	122	0.2	0.3	5.128	A
C-A	372	93			372				
A-B	38	10			38				
A-C	380	95			380				

17:30 - 17:45

Stream	Total Demand (Veh/hr)	Junction Arrivals (Veh)	Capacity (Veh/hr)	RFC	Throughput (Veh/hr)	Start queue (Veh)	End queue (Veh)	Delay (s)	Unsignalised level of service
B-AC	48	12	473	0.102	48	0.1	0.1	8.466	A
C-AB	123	31	825	0.149	123	0.3	0.3	5.136	A
C-A	372	93			372				
A-B	38	10			38				
A-C	380	95			380				

17:45 - 18:00

Stream	Total Demand (Veh/hr)	Junction Arrivals (Veh)	Capacity (Veh/hr)	RFC	Throughput (Veh/hr)	Start queue (Veh)	End queue (Veh)	Delay (s)	Unsignalised level of service
B-AC	39	10	501	0.079	40	0.1	0.1	7.810	A
C-AB	86	22	783	0.110	87	0.3	0.2	5.185	A
C-A	317	79			317				
A-B	31	8			31				
A-C	310	78			310				

18:00 - 18:15

Stream	Total Demand (Veh/hr)	Junction Arrivals (Veh)	Capacity (Veh/hr)	RFC	Throughput (Veh/hr)	Start queue (Veh)	End queue (Veh)	Delay (s)	Unsignalised level of service
B-AC	33	8	520	0.064	33	0.1	0.1	7.399	A
C-AB	65	16	753	0.087	66	0.2	0.2	5.245	A
C-A	273	68			273				
A-B	26	7			26				
A-C	260	65			260				

2033 Base + CD + D with TP, AM

Data Errors and Warnings

Severity	Area	Item	Description
Warning	Major arm width	C - Whaddon Road (W) - Major arm geometry	For two-way major roads, please interpret results with caution if the total major carriageway width is less than 6m.

Junction Network

Junctions

Junction	Name	Junction type	Major road direction	Use circulating lanes	Junction Delay (s)	Junction LOS
J4	Whaddon Road/ Westbrook End	T-Junction	Two-way		1.35	A

Junction Network Options

Driving side	Lighting
Left	Normal/unknown

Traffic Demand

Demand Set Details

ID	Scenario name	Time Period name	Traffic profile type	Start time (HH:mm)	Finish time (HH:mm)	Time segment length (min)	Run automatically
D17	2033 Base + CD + D with TP	AM	ONE HOUR	07:30	09:00	15	✓

Vehicle mix varies over turn	Vehicle mix varies over entry	Vehicle mix source	PCU Factor for a HV (PCU)
✓	✓	HV Percentages	2.00

Demand overview (Traffic)

Arm	Linked arm	Profile type	Use O-D data	Average Demand (Veh/hr)	Scaling Factor (%)
A - Whaddon Road (E)		ONE HOUR	✓	432	100.000
B - Westbrook End		ONE HOUR	✓	79	100.000
C - Whaddon Road (W)		ONE HOUR	✓	395	100.000

Origin-Destination Data

Demand (Veh/hr)

		To		
		A - Whaddon Road (E)	B - Westbrook End	C - Whaddon Road (W)
From	A - Whaddon Road (E)	0	19	412
	B - Westbrook End	21	0	58
	C - Whaddon Road (W)	347	48	0

Vehicle Mix

Heavy Vehicle Percentages

		To		
		A - Whaddon Road (E)	B - Westbrook End	C - Whaddon Road (W)
From	A - Whaddon Road (E)	0	0	2
	B - Westbrook End	0	0	0
	C - Whaddon Road (W)	3	0	0

Results

Results Summary for whole modelled period

Stream	Max RFC	Max Delay (s)	Max Queue (Veh)	Max LOS	Average Demand (Veh/hr)	Total Junction Arrivals (Veh)
B-AC	0.19	9.62	0.2	A	73	109
C-AB	0.14	5.47	0.3	A	79	119
C-A					283	425
A-B					18	27
A-C					378	568

Main Results for each time segment

07:30 - 07:45

Stream	Total Demand (Veh/hr)	Junction Arrivals (Veh)	Capacity (Veh/hr)	RFC	Throughput (Veh/hr)	Start queue (Veh)	End queue (Veh)	Delay (s)	Unsignalised level of service
B-AC	60	15	513	0.116	59	0.0	0.1	7.923	A
C-AB	57	14	717	0.080	56	0.0	0.1	5.448	A
C-A	241	60			241				
A-B	15	4			15				
A-C	310	78			310				

07:45 - 08:00

Stream	Total Demand (Veh/hr)	Junction Arrivals (Veh)	Capacity (Veh/hr)	RFC	Throughput (Veh/hr)	Start queue (Veh)	End queue (Veh)	Delay (s)	Unsignalised level of service
B-AC	71	18	491	0.145	71	0.1	0.2	8.559	A
C-AB	75	19	740	0.102	75	0.1	0.2	5.415	A
C-A	280	70			280				
A-B	18	4			18				
A-C	371	93			371				

08:00 - 08:15

Stream	Total Demand (Veh/hr)	Junction Arrivals (Veh)	Capacity (Veh/hr)	RFC	Throughput (Veh/hr)	Start queue (Veh)	End queue (Veh)	Delay (s)	Unsignalised level of service
B-AC	87	22	461	0.189	87	0.2	0.2	9.612	A
C-AB	106	26	772	0.137	105	0.2	0.3	5.394	A
C-A	330	82			330				
A-B	21	5			21				
A-C	454	114			454				

08:15 - 08:30

Stream	Total Demand (Veh/hr)	Junction Arrivals (Veh)	Capacity (Veh/hr)	RFC	Throughput (Veh/hr)	Start queue (Veh)	End queue (Veh)	Delay (s)	Unsignalised level of service
B-AC	87	22	461	0.189	87	0.2	0.2	9.624	A
C-AB	106	26	773	0.137	106	0.3	0.3	5.406	A
C-A	330	82			330				
A-B	21	5			21				
A-C	454	114			454				

08:30 - 08:45

Stream	Total Demand (Veh/hr)	Junction Arrivals (Veh)	Capacity (Veh/hr)	RFC	Throughput (Veh/hr)	Start queue (Veh)	End queue (Veh)	Delay (s)	Unsignalised level of service
B-AC	71	18	491	0.145	71	0.2	0.2	8.577	A
C-AB	75	19	740	0.102	76	0.3	0.2	5.436	A
C-A	280	70			280				
A-B	18	4			18				
A-C	371	93			371				

08:45 - 09:00

Stream	Total Demand (Veh/hr)	Junction Arrivals (Veh)	Capacity (Veh/hr)	RFC	Throughput (Veh/hr)	Start queue (Veh)	End queue (Veh)	Delay (s)	Unsignalised level of service
B-AC	60	15	513	0.116	60	0.2	0.1	7.948	A
C-AB	57	14	717	0.080	58	0.2	0.2	5.470	A
C-A	240	60			240				
A-B	15	4			15				
A-C	310	78			310				

2033 Base + CD + D with TP, PM

Data Errors and Warnings

Severity	Area	Item	Description
Warning	Major arm width	C - Whaddon Road (W) - Major arm geometry	For two-way major roads, please interpret results with caution if the total major carriageway width is less than 6m.

Junction Network

Junctions

Junction	Name	Junction type	Major road direction	Use circulating lanes	Junction Delay (s)	Junction LOS
J4	Whaddon Road/ Westbrook End	T-Junction	Two-way		1.04	A

Junction Network Options

Driving side	Lighting
Left	Normal/unknown

Traffic Demand

Demand Set Details

ID	Scenario name	Time Period name	Traffic profile type	Start time (HH:mm)	Finish time (HH:mm)	Time segment length (min)	Run automatically
D18	2033 Base + CD + D with TP	PM	ONE HOUR	16:45	18:15	15	✓

Vehicle mix varies over turn	Vehicle mix varies over entry	Vehicle mix source	PCU Factor for a HV (PCU)
✓	✓	HV Percentages	2.00

Demand overview (Traffic)

Arm	Linked arm	Profile type	Use O-D data	Average Demand (Veh/hr)	Scaling Factor (%)
A - Whaddon Road (E)		ONE HOUR	✓	369	100.000
B - Westbrook End		ONE HOUR	✓	44	100.000
C - Whaddon Road (W)		ONE HOUR	✓	440	100.000

Origin-Destination Data

Demand (Veh/hr)

		To		
		A - Whaddon Road (E)	B - Westbrook End	C - Whaddon Road (W)
From	A - Whaddon Road (E)	0	35	334
	B - Westbrook End	12	0	32
	C - Whaddon Road (W)	388	52	0

Vehicle Mix

Heavy Vehicle Percentages

		To		
		A - Whaddon Road (E)	B - Westbrook End	C - Whaddon Road (W)
From	A - Whaddon Road (E)	0	3	1
	B - Westbrook End	0	0	4
	C - Whaddon Road (W)	1	0	0

Results

Results Summary for whole modelled period

Stream	Max RFC	Max Delay (s)	Max Queue (Veh)	Max LOS	Average Demand (Veh/hr)	Total Junction Arrivals (Veh)
B-AC	0.10	8.39	0.1	A	40	60
C-AB	0.15	5.26	0.3	A	90	135
C-A					314	471
A-B					32	48
A-C					307	460

Main Results for each time segment

16:45 - 17:00

Stream	Total Demand (Veh/hr)	Junction Arrivals (Veh)	Capacity (Veh/hr)	RFC	Throughput (Veh/hr)	Start queue (Veh)	End queue (Veh)	Delay (s)	Unsignalised level of service
B-AC	33	8	523	0.063	33	0.0	0.1	7.347	A
C-AB	64	16	750	0.085	63	0.0	0.2	5.243	A
C-A	267	67			267				
A-B	26	7			26				
A-C	252	63			252				

17:00 - 17:15

Stream	Total Demand (Veh/hr)	Junction Arrivals (Veh)	Capacity (Veh/hr)	RFC	Throughput (Veh/hr)	Start queue (Veh)	End queue (Veh)	Delay (s)	Unsignalised level of service
B-AC	39	10	504	0.078	39	0.1	0.1	7.749	A
C-AB	85	21	779	0.109	85	0.2	0.2	5.187	A
C-A	311	78			311				
A-B	31	8			31				
A-C	300	75			300				

17:15 - 17:30

Stream	Total Demand (Veh/hr)	Junction Arrivals (Veh)	Capacity (Veh/hr)	RFC	Throughput (Veh/hr)	Start queue (Veh)	End queue (Veh)	Delay (s)	Unsignalised level of service
B-AC	48	12	477	0.101	48	0.1	0.1	8.384	A
C-AB	120	30	820	0.146	120	0.2	0.3	5.145	A
C-A	365	91			365				
A-B	38	10			38				
A-C	368	92			368				

17:30 - 17:45

Stream	Total Demand (Veh/hr)	Junction Arrivals (Veh)	Capacity (Veh/hr)	RFC	Throughput (Veh/hr)	Start queue (Veh)	End queue (Veh)	Delay (s)	Unsignalised level of service
B-AC	48	12	477	0.101	48	0.1	0.1	8.388	A
C-AB	120	30	820	0.147	120	0.3	0.3	5.151	A
C-A	365	91			365				
A-B	38	10			38				
A-C	368	92			368				

17:45 - 18:00

Stream	Total Demand (Veh/hr)	Junction Arrivals (Veh)	Capacity (Veh/hr)	RFC	Throughput (Veh/hr)	Start queue (Veh)	End queue (Veh)	Delay (s)	Unsignalised level of service
B-AC	39	10	504	0.078	40	0.1	0.1	7.757	A
C-AB	85	21	779	0.109	86	0.3	0.2	5.204	A
C-A	311	78			311				
A-B	31	8			31				
A-C	300	75			300				

18:00 - 18:15

Stream	Total Demand (Veh/hr)	Junction Arrivals (Veh)	Capacity (Veh/hr)	RFC	Throughput (Veh/hr)	Start queue (Veh)	End queue (Veh)	Delay (s)	Unsignalised level of service
B-AC	33	8	522	0.063	33	0.1	0.1	7.356	A
C-AB	64	16	750	0.086	65	0.2	0.2	5.258	A
C-A	267	67			267				
A-B	26	7			26				
A-C	252	63			252				

2033 Base + CD + D - ST, AM

Data Errors and Warnings

Severity	Area	Item	Description
Warning	Major arm width	C - Whaddon Road (W) - Major arm geometry	For two-way major roads, please interpret results with caution if the total major carriageway width is less than 6m.

Junction Network

Junctions

Junction	Name	Junction type	Major road direction	Use circulating lanes	Junction Delay (s)	Junction LOS
J4	Whaddon Road/ Westbrook End	T-Junction	Two-way		1.31	A

Junction Network Options

Driving side	Lighting
Left	Normal/unknown

Traffic Demand

Demand Set Details

ID	Scenario name	Time Period name	Traffic profile type	Start time (HH:mm)	Finish time (HH:mm)	Time segment length (min)	Run automatically
D19	2033 Base + CD + D - ST	AM	ONE HOUR	07:30	09:00	15	✓

Vehicle mix varies over turn	Vehicle mix varies over entry	Vehicle mix source	PCU Factor for a HV (PCU)
✓	✓	HV Percentages	2.00

Demand overview (Traffic)

Arm	Linked arm	Profile type	Use O-D data	Average Demand (Veh/hr)	Scaling Factor (%)
A - Whaddon Road (E)		ONE HOUR	✓	450	100.000
B - Westbrook End		ONE HOUR	✓	79	100.000
C - Whaddon Road (W)		ONE HOUR	✓	425	100.000

Origin-Destination Data

Demand (Veh/hr)

		To		
		A - Whaddon Road (E)	B - Westbrook End	C - Whaddon Road (W)
From	A - Whaddon Road (E)	0	19	431
	B - Westbrook End	21	0	58
	C - Whaddon Road (W)	377	48	0

Vehicle Mix

Heavy Vehicle Percentages

		To		
		A - Whaddon Road (E)	B - Westbrook End	C - Whaddon Road (W)
From	A - Whaddon Road (E)	0	0	2
	B - Westbrook End	0	0	1
	C - Whaddon Road (W)	2	1	0

Results

Results Summary for whole modelled period

Stream	Max RFC	Max Delay (s)	Max Queue (Veh)	Max LOS	Average Demand (Veh/hr)	Total Junction Arrivals (Veh)
B-AC	0.19	9.68	0.2	A	73	109
C-AB	0.14	5.43	0.3	A	84	126
C-A					306	459
A-B					18	27
A-C					395	593

Main Results for each time segment

07:30 - 07:45

Stream	Total Demand (Veh/hr)	Junction Arrivals (Veh)	Capacity (Veh/hr)	RFC	Throughput (Veh/hr)	Start queue (Veh)	End queue (Veh)	Delay (s)	Unsignalised level of service
B-AC	60	15	514	0.116	59	0.0	0.1	7.907	A
C-AB	60	15	724	0.082	59	0.0	0.2	5.410	A
C-A	260	65			260				
A-B	15	4			15				
A-C	324	81			324				

07:45 - 08:00

Stream	Total Demand (Veh/hr)	Junction Arrivals (Veh)	Capacity (Veh/hr)	RFC	Throughput (Veh/hr)	Start queue (Veh)	End queue (Veh)	Delay (s)	Unsignalised level of service
B-AC	71	18	491	0.145	71	0.1	0.2	8.565	A
C-AB	79	20	750	0.106	79	0.2	0.2	5.367	A
C-A	303	76			303				
A-B	18	4			18				
A-C	387	97			387				

08:00 - 08:15

Stream	Total Demand (Veh/hr)	Junction Arrivals (Veh)	Capacity (Veh/hr)	RFC	Throughput (Veh/hr)	Start queue (Veh)	End queue (Veh)	Delay (s)	Unsignalised level of service
B-AC	87	22	459	0.190	87	0.2	0.2	9.661	A
C-AB	113	28	788	0.143	112	0.2	0.3	5.335	A
C-A	355	89			355				
A-B	21	5			21				
A-C	474	119			474				

08:15 - 08:30

Stream	Total Demand (Veh/hr)	Junction Arrivals (Veh)	Capacity (Veh/hr)	RFC	Throughput (Veh/hr)	Start queue (Veh)	End queue (Veh)	Delay (s)	Unsignalised level of service
B-AC	87	22	459	0.190	87	0.2	0.2	9.676	A
C-AB	113	28	788	0.143	113	0.3	0.3	5.342	A
C-A	355	89			355				
A-B	21	5			21				
A-C	474	119			474				

08:30 - 08:45

Stream	Total Demand (Veh/hr)	Junction Arrivals (Veh)	Capacity (Veh/hr)	RFC	Throughput (Veh/hr)	Start queue (Veh)	End queue (Veh)	Delay (s)	Unsignalised level of service
B-AC	71	18	491	0.145	71	0.2	0.2	8.581	A
C-AB	79	20	751	0.106	80	0.3	0.2	5.379	A
C-A	302	76			302				
A-B	18	4			18				
A-C	387	97			387				

08:45 - 09:00

Stream	Total Demand (Veh/hr)	Junction Arrivals (Veh)	Capacity (Veh/hr)	RFC	Throughput (Veh/hr)	Start queue (Veh)	End queue (Veh)	Delay (s)	Unsignalised level of service
B-AC	60	15	514	0.116	60	0.2	0.1	7.933	A
C-AB	60	15	725	0.083	60	0.2	0.2	5.426	A
C-A	260	65			260				
A-B	15	4			15				
A-C	324	81			324				

2033 Base + CD + D - ST, PM

Data Errors and Warnings

Severity	Area	Item	Description
Warning	Major arm width	C - Whaddon Road (W) - Major arm geometry	For two-way major roads, please interpret results with caution if the total major carriageway width is less than 6m.

Junction Network

Junctions

Junction	Name	Junction type	Major road direction	Use circulating lanes	Junction Delay (s)	Junction LOS
J4	Whaddon Road/ Westbrook End	T-Junction	Two-way		1.00	A

Junction Network Options

Driving side	Lighting
Left	Normal/unknown

Traffic Demand

Demand Set Details

ID	Scenario name	Time Period name	Traffic profile type	Start time (HH:mm)	Finish time (HH:mm)	Time segment length (min)	Run automatically
D20	2033 Base + CD + D - ST	PM	ONE HOUR	16:45	18:15	15	✓

Vehicle mix varies over turn	Vehicle mix varies over entry	Vehicle mix source	PCU Factor for a HV (PCU)
✓	✓	HV Percentages	2.00

Demand overview (Traffic)

Arm	Linked arm	Profile type	Use O-D data	Average Demand (Veh/hr)	Scaling Factor (%)
A - Whaddon Road (E)		ONE HOUR	✓	394	100.000
B - Westbrook End		ONE HOUR	✓	44	100.000
C - Whaddon Road (W)		ONE HOUR	✓	457	100.000

Origin-Destination Data

Demand (Veh/hr)

		To		
		A - Whaddon Road (E)	B - Westbrook End	C - Whaddon Road (W)
From	A - Whaddon Road (E)	0	35	359
	B - Westbrook End	12	0	32
	C - Whaddon Road (W)	405	52	0

Vehicle Mix

Heavy Vehicle Percentages

		To		
		A - Whaddon Road (E)	B - Westbrook End	C - Whaddon Road (W)
From	A - Whaddon Road (E)	0	0	1
	B - Westbrook End	0	0	2
	C - Whaddon Road (W)	3	0	0

Results

Results Summary for whole modelled period

Stream	Max RFC	Max Delay (s)	Max Queue (Veh)	Max LOS	Average Demand (Veh/hr)	Total Junction Arrivals (Veh)
B-AC	0.10	8.45	0.1	A	40	60
C-AB	0.15	5.25	0.4	A	93	139
C-A					326	489
A-B					32	48
A-C					330	495

Main Results for each time segment

16:45 - 17:00

Stream	Total Demand (Veh/hr)	Junction Arrivals (Veh)	Capacity (Veh/hr)	RFC	Throughput (Veh/hr)	Start queue (Veh)	End queue (Veh)	Delay (s)	Unsignalised level of service
B-AC	33	8	523	0.063	33	0.0	0.1	7.337	A
C-AB	66	16	754	0.087	66	0.0	0.2	5.227	A
C-A	278	70			278				
A-B	26	7			26				
A-C	271	68			271				

17:00 - 17:15

Stream	Total Demand (Veh/hr)	Junction Arrivals (Veh)	Capacity (Veh/hr)	RFC	Throughput (Veh/hr)	Start queue (Veh)	End queue (Veh)	Delay (s)	Unsignalised level of service
B-AC	39	10	503	0.078	39	0.1	0.1	7.765	A
C-AB	88	22	783	0.112	87	0.2	0.2	5.170	A
C-A	323	81			323				
A-B	31	8			31				
A-C	323	81			323				

17:15 - 17:30

Stream	Total Demand (Veh/hr)	Junction Arrivals (Veh)	Capacity (Veh/hr)	RFC	Throughput (Veh/hr)	Start queue (Veh)	End queue (Veh)	Delay (s)	Unsignalised level of service
B-AC	48	12	474	0.102	48	0.1	0.1	8.448	A
C-AB	125	31	826	0.151	124	0.2	0.4	5.129	A
C-A	378	94			378				
A-B	38	10			38				
A-C	396	99			396				

17:30 - 17:45

Stream	Total Demand (Veh/hr)	Junction Arrivals (Veh)	Capacity (Veh/hr)	RFC	Throughput (Veh/hr)	Start queue (Veh)	End queue (Veh)	Delay (s)	Unsignalised level of service
B-AC	48	12	474	0.102	48	0.1	0.1	8.452	A
C-AB	125	31	826	0.151	125	0.4	0.4	5.143	A
C-A	378	94			378				
A-B	38	10			38				
A-C	396	99			396				

17:45 - 18:00

Stream	Total Demand (Veh/hr)	Junction Arrivals (Veh)	Capacity (Veh/hr)	RFC	Throughput (Veh/hr)	Start queue (Veh)	End queue (Veh)	Delay (s)	Unsignalised level of service
B-AC	39	10	503	0.078	40	0.1	0.1	7.771	A
C-AB	88	22	784	0.112	88	0.4	0.2	5.194	A
C-A	323	81			323				
A-B	31	8			31				
A-C	323	81			323				

18:00 - 18:15

Stream	Total Demand (Veh/hr)	Junction Arrivals (Veh)	Capacity (Veh/hr)	RFC	Throughput (Veh/hr)	Start queue (Veh)	End queue (Veh)	Delay (s)	Unsignalised level of service
B-AC	33	8	523	0.063	33	0.1	0.1	7.350	A
C-AB	66	16	754	0.088	66	0.2	0.2	5.249	A
C-A	278	69			278				
A-B	26	7			26				
A-C	271	68			271				

2033 Base + CD + SP (ST), AM

Data Errors and Warnings

Severity	Area	Item	Description
Warning	Major arm width	C - Whaddon Road (W) - Major arm geometry	For two-way major roads, please interpret results with caution if the total major carriageway width is less than 6m.

Junction Network

Junctions

Junction	Name	Junction type	Major road direction	Use circulating lanes	Junction Delay (s)	Junction LOS
J4	Whaddon Road/ Westbrook End	T-Junction	Two-way		1.39	A

Junction Network Options

Driving side	Lighting
Left	Normal/unknown

Traffic Demand

Demand Set Details

ID	Scenario name	Time Period name	Traffic profile type	Start time (HH:mm)	Finish time (HH:mm)	Time segment length (min)	Run automatically
D21	2033 Base + CD + SP (ST)	AM	ONE HOUR	07:30	09:00	15	✓

Vehicle mix varies over turn	Vehicle mix varies over entry	Vehicle mix source	PCU Factor for a HV (PCU)
✓	✓	HV Percentages	2.00

Demand overview (Traffic)

Arm	Linked arm	Profile type	Use O-D data	Average Demand (Veh/hr)	Scaling Factor (%)
A - Whaddon Road (E)		ONE HOUR	✓	400	100.000
B - Westbrook End		ONE HOUR	✓	79	100.000
C - Whaddon Road (W)		ONE HOUR	✓	366	100.000

Origin-Destination Data

Demand (Veh/hr)

		To		
		A - Whaddon Road (E)	B - Westbrook End	C - Whaddon Road (W)
From	A - Whaddon Road (E)	0	19	381
	B - Westbrook End	21	0	58
	C - Whaddon Road (W)	318	48	0

Vehicle Mix

Heavy Vehicle Percentages

		To		
		A - Whaddon Road (E)	B - Westbrook End	C - Whaddon Road (W)
From	A - Whaddon Road (E)	0	0	2
	B - Westbrook End	0	0	1
	C - Whaddon Road (W)	2	1	0

Results

Results Summary for whole modelled period

Stream	Max RFC	Max Delay (s)	Max Queue (Veh)	Max LOS	Average Demand (Veh/hr)	Total Junction Arrivals (Veh)
B-AC	0.18	9.18	0.2	A	73	109
C-AB	0.13	5.58	0.3	A	76	114
C-A					260	391
A-B					18	27
A-C					349	524

Main Results for each time segment

07:30 - 07:45

Stream	Total Demand (Veh/hr)	Junction Arrivals (Veh)	Capacity (Veh/hr)	RFC	Throughput (Veh/hr)	Start queue (Veh)	End queue (Veh)	Delay (s)	Unsignalised level of service
B-AC	60	15	527	0.113	59	0.0	0.1	7.685	A
C-AB	55	14	701	0.079	55	0.0	0.1	5.566	A
C-A	221	55			221				
A-B	15	4			15				
A-C	287	72			287				

07:45 - 08:00

Stream	Total Demand (Veh/hr)	Junction Arrivals (Veh)	Capacity (Veh/hr)	RFC	Throughput (Veh/hr)	Start queue (Veh)	End queue (Veh)	Delay (s)	Unsignalised level of service
B-AC	71	18	507	0.140	71	0.1	0.2	8.248	A
C-AB	72	18	722	0.100	72	0.1	0.2	5.541	A
C-A	257	64			257				
A-B	18	4			18				
A-C	342	86			342				

08:00 - 08:15

Stream	Total Demand (Veh/hr)	Junction Arrivals (Veh)	Capacity (Veh/hr)	RFC	Throughput (Veh/hr)	Start queue (Veh)	End queue (Veh)	Delay (s)	Unsignalised level of service
B-AC	87	22	480	0.182	87	0.2	0.2	9.163	A
C-AB	100	25	752	0.133	99	0.2	0.3	5.522	A
C-A	304	76			304				
A-B	21	5			21				
A-C	419	105			419				

08:15 - 08:30

Stream	Total Demand (Veh/hr)	Junction Arrivals (Veh)	Capacity (Veh/hr)	RFC	Throughput (Veh/hr)	Start queue (Veh)	End queue (Veh)	Delay (s)	Unsignalised level of service
B-AC	87	22	479	0.182	87	0.2	0.2	9.175	A
C-AB	100	25	752	0.133	100	0.3	0.3	5.528	A
C-A	303	76			303				
A-B	21	5			21				
A-C	419	105			419				

08:30 - 08:45

Stream	Total Demand (Veh/hr)	Junction Arrivals (Veh)	Capacity (Veh/hr)	RFC	Throughput (Veh/hr)	Start queue (Veh)	End queue (Veh)	Delay (s)	Unsignalised level of service
B-AC	71	18	507	0.140	71	0.2	0.2	8.263	A
C-AB	72	18	722	0.100	72	0.3	0.2	5.551	A
C-A	257	64			257				
A-B	18	4			18				
A-C	342	86			342				

08:45 - 09:00

Stream	Total Demand (Veh/hr)	Junction Arrivals (Veh)	Capacity (Veh/hr)	RFC	Throughput (Veh/hr)	Start queue (Veh)	End queue (Veh)	Delay (s)	Unsignalised level of service
B-AC	60	15	527	0.113	60	0.2	0.1	7.708	A
C-AB	55	14	701	0.079	56	0.2	0.1	5.581	A
C-A	220	55			220				
A-B	15	4			15				
A-C	287	72			287				

2033 Base + CD + SP (ST), PM

Data Errors and Warnings

Severity	Area	Item	Description
Warning	Major arm width	C - Whaddon Road (W) - Major arm geometry	For two-way major roads, please interpret results with caution if the total major carriageway width is less than 6m.

Junction Network

Junctions

Junction	Name	Junction type	Major road direction	Use circulating lanes	Junction Delay (s)	Junction LOS
J4	Whaddon Road/ Westbrook End	T-Junction	Two-way		1.07	A

Junction Network Options

Driving side	Lighting
Left	Normal/unknown

Traffic Demand

Demand Set Details

ID	Scenario name	Time Period name	Traffic profile type	Start time (HH:mm)	Finish time (HH:mm)	Time segment length (min)	Run automatically
D22	2033 Base + CD + SP (ST)	PM	ONE HOUR	16:45	18:15	15	✓

Vehicle mix varies over turn	Vehicle mix varies over entry	Vehicle mix source	PCU Factor for a HV (PCU)
✓	✓	HV Percentages	2.00

Demand overview (Traffic)

Arm	Linked arm	Profile type	Use O-D data	Average Demand (Veh/hr)	Scaling Factor (%)
A - Whaddon Road (E)		ONE HOUR	✓	332	100.000
B - Westbrook End		ONE HOUR	✓	44	100.000
C - Whaddon Road (W)		ONE HOUR	✓	407	100.000

Origin-Destination Data

Demand (Veh/hr)

		To		
		A - Whaddon Road (E)	B - Westbrook End	C - Whaddon Road (W)
From	A - Whaddon Road (E)	0	35	298
	B - Westbrook End	12	0	32
	C - Whaddon Road (W)	355	52	0

Vehicle Mix

Heavy Vehicle Percentages

		To		
		A - Whaddon Road (E)	B - Westbrook End	C - Whaddon Road (W)
From	A - Whaddon Road (E)	0	0	1
	B - Westbrook End	0	0	2
	C - Whaddon Road (W)	3	0	0

Results

Results Summary for whole modelled period

Stream	Max RFC	Max Delay (s)	Max Queue (Veh)	Max LOS	Average Demand (Veh/hr)	Total Junction Arrivals (Veh)
B-AC	0.10	8.02	0.1	A	40	60
C-AB	0.14	5.34	0.3	A	85	127
C-A					289	433
A-B					32	48
A-C					273	410

Main Results for each time segment

16:45 - 17:00

Stream	Total Demand (Veh/hr)	Junction Arrivals (Veh)	Capacity (Veh/hr)	RFC	Throughput (Veh/hr)	Start queue (Veh)	End queue (Veh)	Delay (s)	Unsignalised level of service
B-AC	33	8	538	0.061	33	0.0	0.1	7.120	A
C-AB	61	15	738	0.083	61	0.0	0.2	5.318	A
C-A	245	61			245				
A-B	26	7			26				
A-C	224	56			224				

17:00 - 17:15

Stream	Total Demand (Veh/hr)	Junction Arrivals (Veh)	Capacity (Veh/hr)	RFC	Throughput (Veh/hr)	Start queue (Veh)	End queue (Veh)	Delay (s)	Unsignalised level of service
B-AC	39	10	521	0.076	39	0.1	0.1	7.473	A
C-AB	81	20	764	0.106	80	0.2	0.2	5.270	A
C-A	286	71			286				
A-B	31	8			31				
A-C	268	67			268				

17:15 - 17:30

Stream	Total Demand (Veh/hr)	Junction Arrivals (Veh)	Capacity (Veh/hr)	RFC	Throughput (Veh/hr)	Start queue (Veh)	End queue (Veh)	Delay (s)	Unsignalised level of service
B-AC	48	12	497	0.097	48	0.1	0.1	8.020	A
C-AB	112	28	800	0.140	112	0.2	0.3	5.230	A
C-A	336	84			336				
A-B	38	10			38				
A-C	328	82			328				

17:30 - 17:45

Stream	Total Demand (Veh/hr)	Junction Arrivals (Veh)	Capacity (Veh/hr)	RFC	Throughput (Veh/hr)	Start queue (Veh)	End queue (Veh)	Delay (s)	Unsignalised level of service
B-AC	48	12	497	0.097	48	0.1	0.1	8.024	A
C-AB	112	28	801	0.140	112	0.3	0.3	5.241	A
C-A	336	84			336				
A-B	38	10			38				
A-C	328	82			328				

17:45 - 18:00

Stream	Total Demand (Veh/hr)	Junction Arrivals (Veh)	Capacity (Veh/hr)	RFC	Throughput (Veh/hr)	Start queue (Veh)	End queue (Veh)	Delay (s)	Unsignalised level of service
B-AC	39	10	521	0.076	40	0.1	0.1	7.477	A
C-AB	81	20	764	0.106	81	0.3	0.2	5.288	A
C-A	285	71			285				
A-B	31	8			31				
A-C	268	67			268				

18:00 - 18:15

Stream	Total Demand (Veh/hr)	Junction Arrivals (Veh)	Capacity (Veh/hr)	RFC	Throughput (Veh/hr)	Start queue (Veh)	End queue (Veh)	Delay (s)	Unsignalised level of service
B-AC	33	8	538	0.061	33	0.1	0.1	7.129	A
C-AB	62	15	738	0.084	62	0.2	0.2	5.338	A
C-A	245	61			245				
A-B	26	7			26				
A-C	224	56			224				

Junctions 9

ARCADY 9 - Roundabout Module

Version: 9.5.1.7462
© Copyright TRL Limited, 2019

For sales and distribution information, program advice and maintenance, contact TRL:
+44 (0)1344 379777 software@trl.co.uk www.trlsoftware.co.uk

The users of this computer program for the solution of an engineering problem are in no way relieved of their responsibility for the correctness of the solution

Filename: J6 - Bottledump Roundabout_ST.j9
Path: \\uk.wspgroup.com\central data\Projects\700694xx\70069442 - SWMK - 2020\03 WIP\TP Transport Planning\Incoming\iCRC\200821 - Junction and Mitigation Modelling BC Only\J6
Report generation date: 25/08/2020 16:30:12

»2020 Base, AM
»2020 Base, PM
»2033 Base, AM
»2033 Base, PM
»2033 Base + CD + D, AM
»2033 Base + CD + D, PM
»2033 Base + CD + D with TP, AM
»2033 Base + CD + D with TP, PM
»2033 Base + CD + D - ST, AM
»2033 Base + CD + D - ST, PM
»2033 Base + CD + SP (ST), AM
»2033 Base + CD + SP (ST), PM

Summary of junction performance

	AM					PM				
	Set ID	Queue (Veh)	Delay (s)	RFC	LOS	Set ID	Queue (Veh)	Delay (s)	RFC	LOS
	[Lane Simulation] - 2020 Base									
A - Standing Way (E)	D1	4.7	12.67		B	D2	11.7	29.08		D
B - Whaddon Road		5.5	52.25		F		3.3	37.42		E
C - Standing Way (W)		4.7	10.47		B		2.9	7.20		A
	[Lane Simulation] - 2033 Base									
A - Standing Way (E)	D13	12.6	30.28		D	D14	64.4	122.32		F
B - Whaddon Road		36.7	251.75		F		14.6	132.80		F
C - Standing Way (W)		10.8	20.83		C		5.1	10.93		B
	[Lane Simulation] - 2033 Base + CD + D									
A - Standing Way (E)	D15	20.9	45.73		E	D16	76.6	147.05		F
B - Whaddon Road		137.3	893.67		F		56.2	497.64		F
C - Standing Way (W)		20.0	33.57		D		7.4	14.33		B
	[Lane Simulation] - 2033 Base + CD + D with TP									
A - Standing Way (E)	D17	19.2	43.99		E	D18	73.0	139.98		F
B - Whaddon Road		108.5	745.87		F		42.4	379.78		F
C - Standing Way (W)		13.4	27.22		D		6.0	13.11		B
	[Lane Simulation] - 2033 Base + CD + D - ST									
A - Standing Way (E)	D19	10.6	24.44		C	D20	50.3	103.50		F
B - Whaddon Road		107.9	696.21		F		48.5	400.53		F
C - Standing Way (W)		23.2	40.96		E		5.0	10.89		B
	[Lane Simulation] - 2033 Base + CD + SP (ST)									
A - Standing Way (E)	D21	7.8	19.72		C	D22	38.8	77.11		F
B - Whaddon Road		26.0	176.12		F		14.1	116.68		F
C - Standing Way (W)		12.4	23.84		C		4.0	8.95		A

There are warnings associated with one or more model runs - see the 'Data Errors and Warnings' tables for each Analysis or Demand Set.

Values shown are the highest values encountered over all time segments. Delay is the maximum value of average delay per arriving vehicle. Arm and junction delays are averages for all movements, including movements with zero delay.

File summary

File Description

Title	Bottledump Roundabout
Location	51°59'11.04"N, 0°48'13.16"W
Site number	6
Date	09/04/2020
Version	
Status	(new file)
Identifier	
Client	
Jobnumber	
Enumerator	CORP\INVN01911
Description	

Units

Distance units	Speed units	Traffic units input	Traffic units results	Flow units	Average delay units	Total delay units	Rate of delay units
m	kph	Veh	Veh	perHour	s	-Min	perMin

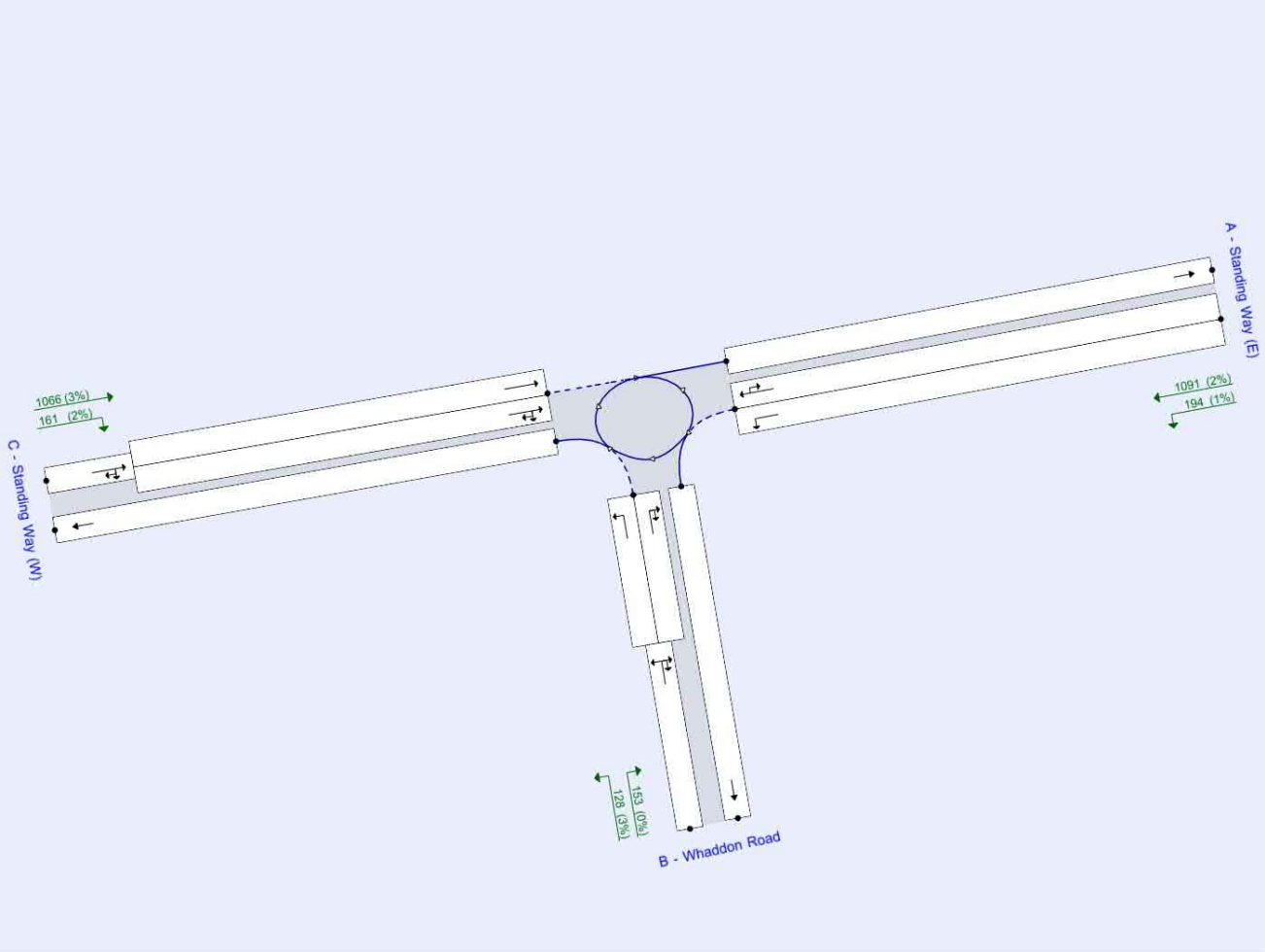

The junction diagram reflects the last run of Junctions.

Analysis Options

Vehicle length (m)	Calculate Queue Percentiles	Calculate detailed queueing delay	Calculate residual capacity	RFC Threshold	Average Delay threshold (s)	Queue threshold (PCU)
5.75				0.85	36.00	20.00

Lane Simulation options

Criteria type	Stop criteria (%)	Stop criteria time (s)	Stop criteria number of trials	Random seed	Results refresh speed (s)	Individual vehicle animation number of trials	Average animation capture interval (s)	Use quick response	Do flow sampling	Suppress automatic lane creation	Last run random seed	Last run number of trials	Last run time taken (s)
Delay	1.00	100000	100000	-1	3	1	60	✓			799430192	316	34.98

Demand Set Summary

ID	Scenario name	Time Period name	Traffic profile type	Start time (HH:mm)	Finish time (HH:mm)	Time segment length (min)	Run automatically
D1	2020 Base	AM	ONE HOUR	07:30	09:00	15	✓
D2	2020 Base	PM	ONE HOUR	16:45	18:15	15	✓
D3	2026 Base	AM	ONE HOUR	07:30	09:00	15	✓
D4	2026 Base	PM	ONE HOUR	16:45	18:15	15	✓
D5	2026 Base + CD + D	AM	ONE HOUR	07:30	09:00	15	✓
D6	2026 Base + CD + D	PM	ONE HOUR	16:45	18:15	15	✓
D7	2026 Base + CD + D with TP	AM	ONE HOUR	07:30	09:00	15	✓
D8	2026 Base + CD + D with TP	PM	ONE HOUR	16:45	18:15	15	✓
D9	2026 Base + CD + D - ST	AM	ONE HOUR	07:30	09:00	15	✓
D10	2026 Base + CD + D - ST	PM	ONE HOUR	16:45	18:15	15	✓
D11	2026 Base + CD + SP (ST)	AM	ONE HOUR	07:30	09:00	15	✓
D12	2026 Base + CD + SP (ST)	PM	ONE HOUR	16:45	18:15	15	✓
D13	2033 Base	AM	ONE HOUR	07:30	09:00	15	✓
D14	2033 Base	PM	ONE HOUR	16:45	18:15	15	✓
D15	2033 Base + CD + D	AM	ONE HOUR	07:30	09:00	15	✓
D16	2033 Base + CD + D	PM	ONE HOUR	16:45	18:15	15	✓
D17	2033 Base + CD + D with TP	AM	ONE HOUR	07:30	09:00	15	✓
D18	2033 Base + CD + D with TP	PM	ONE HOUR	16:45	18:15	15	✓
D19	2033 Base + CD + D - ST	AM	ONE HOUR	07:30	09:00	15	✓
D20	2033 Base + CD + D - ST	PM	ONE HOUR	16:45	18:15	15	✓
D21	2033 Base + CD + SP (ST)	AM	ONE HOUR	07:30	09:00	15	✓
D22	2033 Base + CD + SP (ST)	PM	ONE HOUR	16:45	18:15	15	✓

Analysis Set Details

ID	Use Lane Simulation	Include in report	Use specific Demand Set(s)	Specific Demand Set(s)	Network flow scaling factor (%)	Network capacity scaling factor (%)
A1	✓	✓	✓	D1,D2,D13,D14,D15,D16,D17,D18,D19,D20,D21,D22	100.000	100.000

2020 Base, AM

Data Errors and Warnings

Severity	Area	Item	Description
Warning	Lane Simulation	A1 - [Lane Simulation]	This analysis set uses Lane Simulation mode. This is provided as an investigative tool and the user should apply judgement when interpreting the results.
Warning	Geometry	C - Standing Way (W) - Roundabout Geometry	Effective flare length is over 30m, which is outside the normal range. Treat capacities with increasing caution.

Junction Network

Junctions

Junction	Name	Junction type	Use circulating lanes	Arm order	Junction Delay (s)	Junction LOS
J6	Bottledump Roundabout	Standard Roundabout		A, B, C	16.67	C

Junction Network Options

Driving side	Lighting
Left	Normal/unknown

Arms

Arms

Arm	Name	Description
A	Standing Way (E)	
B	Whaddon Road	
C	Standing Way (W)	

Roundabout Geometry

Arm	V - Approach road half-width (m)	E - Entry width (m)	I' - Effective flare length (m)	R - Entry radius (m)	D - Inscribed circle diameter (m)	PHI - Conflict (entry) angle (deg)	Exit only
A - Standing Way (E)	7.50	7.50	0.0	37.2	56.3	27.0	
B - Whaddon Road	3.90	6.70	19.4	50.0	56.3	11.5	
C - Standing Way (W)	3.70	7.40	89.1	38.6	56.3	27.0	

Slope / Intercept / Capacity

Arm Intercept Adjustments

Arm	Type	Reason	Direct intercept adjustment (PCU/hr)
A - Standing Way (E)	Direct		150
B - Whaddon Road	Direct		-600
C - Standing Way (W)	None		

Roundabout Slope and Intercept used in model

Arm	Final slope	Final intercept (PCU/hr)
A - Standing Way (E)	0.703	2498
B - Whaddon Road	0.644	1327
C - Standing Way (W)	0.673	2182

The slope and intercept shown above include any corrections and adjustments.

Lane Simulation: Arm options

Arm	Lane capacity source	Traffic considering secondary lanes (%)
A - Standing Way (E)	Apportion from lane geometry	10.00
B - Whaddon Road	Evenly split	10.00
C - Standing Way (W)	Evenly split	10.00

Lanes

Arm	Side	Lane level	Lane	Destination arms	Has limited storage	Storage (PCU)	Has bottleneck	Minimum capacity (PCU/hr)	Maximum capacity (PCU/hr)	Signalised
A - Standing Way (E)	Entry	1	1	B		Infinity		0	99999	
			2	A, C		Infinity		0	99999	
	Exit	1	1			Infinity				
B - Whaddon Road	Entry	1	1	C	✓	4.00		0	99999	
			2	A, B	✓	5.00		0	99999	
		2	1	(A, B, C)		Infinity				
	Exit	1	1			Infinity				
C - Standing Way (W)	Entry	1	1	A	✓	14.00		0	99999	
			2	A, B, C	✓	14.00		0	99999	
		2	1	(A, B, C)		Infinity				
	Exit	1	1			Infinity				

Entry Lane Geometry

Arm	Side	Lane level	Lane	V - Approach road half-width (m)	E - Entry width (m)	l' - Effective flare length (m)	R - Entry radius (m)	D - Inscribed circle diameter (m)	PHI - Conflict (entry) angle (deg)
A - Standing Way (E)	Entry	1	1	3.00	3.00	0.0	38.0	56.3	29.0
			2	3.75	4.00	1.0	40.0	56.3	27.0

Entry Lane slope and intercept

Arm	Side	Lane level	Lane	Final slope	Final intercept (PCU/hr)
A - Standing Way (E)	Entry	1	1	0.305	1083
			2	0.398	1415
B - Whaddon Road	Entry	1	1	0.322	664
			2	0.322	664
C - Standing Way (W)	Entry	1	1	0.337	1091
			2	0.337	1091

Summary of Entry Lane allowed movements

Arm	Lane Level	Lane	Destination arm		
			Standing Way (E)	Whaddon Road	Standing Way (W)
A - Standing Way (E)	1	1		✓	
		2	✓		✓
B - Whaddon Road	1	1			✓
		2	✓	✓	
	2	1	✓	✓	✓
C - Standing Way (W)	1	1	✓		
		2	✓	✓	✓
	2	1	✓	✓	✓

Traffic Demand

Demand Set Details

ID	Scenario name	Time Period name	Traffic profile type	Start time (HH:mm)	Finish time (HH:mm)	Time segment length (min)	Run automatically
D1	2020 Base	AM	ONE HOUR	07:30	09:00	15	✓

Vehicle mix varies over turn	Vehicle mix varies over entry	Vehicle mix source	PCU Factor for a HV (PCU)
✓	✓	HV Percentages	2.00

Demand overview (Traffic)

Arm	Linked arm	Profile type	Use O-D data	Average Demand (Veh/hr)	Scaling Factor (%)
A - Standing Way (E)		ONE HOUR	✓	1104	100.000
B - Whaddon Road		ONE HOUR	✓	374	100.000
C - Standing Way (W)		ONE HOUR	✓	1389	100.000

Origin-Destination Data

Demand (Veh/hr)

		To		
		A - Standing Way (E)	B - Whaddon Road	C - Standing Way (W)
From	A - Standing Way (E)	3	181	920
	B - Whaddon Road	183	0	191
	C - Standing Way (W)	1281	108	0

Proportions

		To		
		A - Standing Way (E)	B - Whaddon Road	C - Standing Way (W)
From	A - Standing Way (E)	0.00	0.16	0.83
	B - Whaddon Road	0.49	0.00	0.51
	C - Standing Way (W)	0.92	0.08	0.00

Vehicle Mix

Heavy Vehicle Percentages

		To		
		A - Standing Way (E)	B - Whaddon Road	C - Standing Way (W)
From	A - Standing Way (E)	33	2	6
	B - Whaddon Road	2	0	3
	C - Standing Way (W)	4	6	0

Average PCU Per Veh

		To		
		A - Standing Way (E)	B - Whaddon Road	C - Standing Way (W)
From	A - Standing Way (E)	1.330	1.020	1.060
	B - Whaddon Road	1.020	1.000	1.030
	C - Standing Way (W)	1.040	1.060	1.000

Detailed Demand Data

Demand for each time segment

Arm	Time Segment	Demand (Veh/hr)	Demand in PCU (PCU/hr)
A - Standing Way (E)	07:30-07:45	831	876
	07:45-08:00	992	1046
	08:00-08:15	1216	1281
	08:15-08:30	1216	1281
	08:30-08:45	992	1046
	08:45-09:00	831	876
B - Whaddon Road	07:30-07:45	282	289
	07:45-08:00	336	345
	08:00-08:15	412	422
	08:15-08:30	412	422
	08:30-08:45	336	345
	08:45-09:00	282	289
C - Standing Way (W)	07:30-07:45	1046	1089
	07:45-08:00	1249	1301
	08:00-08:15	1529	1593
	08:15-08:30	1529	1593
	08:30-08:45	1249	1301
	08:45-09:00	1046	1089

Results

Results Summary for whole modelled period

Arm	Max Delay (s)	Max Queue (Veh)	Max LOS	Average Demand (Veh/hr)	Total Junction Arrivals (Veh)
A - Standing Way (E)	12.67	4.7	B	1014	1521
B - Whaddon Road	52.25	5.5	F	344	516
C - Standing Way (W)	10.47	4.7	B	1277	1916

Main Results for each time segment

07:30 - 07:45

Arm	Total Demand (Veh/hr)	Junction Arrivals (Veh)	Circulating flow (Veh/hr)	Throughput (Veh/hr)	Average throughput (PCU/hr)	Throughput (exit side) (Veh/hr)	Start queue (Veh)	End queue (Veh)	Delay (s)	Unsignalised level of service
A - Standing Way (E)	831	208	82	830	872	1116	0.0	1.4	5.642	A
B - Whaddon Road	278	69	695	279	288	217	0.0	1.0	13.401	B
C - Standing Way (W)	1057	264	138	1060	1095	836	0.0	1.5	5.350	A

07:45 - 08:00

Arm	Total Demand (Veh/hr)	Junction Arrivals (Veh)	Circulating flow (Veh/hr)	Throughput (Veh/hr)	Average throughput (PCU/hr)	Throughput (exit side) (Veh/hr)	Start queue (Veh)	End queue (Veh)	Delay (s)	Unsignalised level of service
A - Standing Way (E)	993	248	98	991	1048	1315	1.4	2.1	7.417	A
B - Whaddon Road	339	85	829	341	344	260	1.0	1.7	17.987	C
C - Standing Way (W)	1246	312	166	1246	1299	1003	1.5	2.4	6.532	A

08:00 - 08:15

Arm	Total Demand (Veh/hr)	Junction Arrivals (Veh)	Circulating flow (Veh/hr)	Throughput (Veh/hr)	Average throughput (PCU/hr)	Throughput (exit side) (Veh/hr)	Start queue (Veh)	End queue (Veh)	Delay (s)	Unsignalised level of service
A - Standing Way (E)	1217	304	123	1217	1273	1630	2.1	4.6	12.206	B
B - Whaddon Road	414	104	1020	410	409	319	1.7	5.5	39.501	E
C - Standing Way (W)	1549	387	201	1551	1593	1230	2.4	4.7	10.472	B

08:15 - 08:30

Arm	Total Demand (Veh/hr)	Junction Arrivals (Veh)	Circulating flow (Veh/hr)	Throughput (Veh/hr)	Average throughput (PCU/hr)	Throughput (exit side) (Veh/hr)	Start queue (Veh)	End queue (Veh)	Delay (s)	Unsignalised level of service
A - Standing Way (E)	1220	305	119	1224	1282	1599	4.6	4.0	12.672	B
B - Whaddon Road	405	101	1027	411	421	316	5.5	5.5	52.246	F
C - Standing Way (W)	1513	378	205	1514	1594	1233	4.7	4.5	10.360	B

08:30 - 08:45

Arm	Total Demand (Veh/hr)	Junction Arrivals (Veh)	Circulating flow (Veh/hr)	Throughput (Veh/hr)	Average throughput (PCU/hr)	Throughput (exit side) (Veh/hr)	Start queue (Veh)	End queue (Veh)	Delay (s)	Unsignalised level of service
A - Standing Way (E)	990	248	97	989	1052	1325	4.0	2.2	7.778	A
B - Whaddon Road	342	85	827	342	362	259	5.5	1.8	25.355	D
C - Standing Way (W)	1250	312	173	1249	1306	996	4.5	2.4	6.862	A

08:45 - 09:00

Arm	Total Demand (Veh/hr)	Junction Arrivals (Veh)	Circulating flow (Veh/hr)	Throughput (Veh/hr)	Average throughput (PCU/hr)	Throughput (exit side) (Veh/hr)	Start queue (Veh)	End queue (Veh)	Delay (s)	Unsignalised level of service
A - Standing Way (E)	833	208	77	835	883	1115	2.2	1.3	5.845	A
B - Whaddon Road	285	71	695	283	289	217	1.8	1.2	14.100	B
C - Standing Way (W)	1047	262	143	1049	1097	835	2.4	1.5	5.522	A

Lane Results

Lane Level notation: Lane Level 1 is always closest to the junction.

Lanes: Main Results for each time segment

07:30 - 07:45

Arm	Side	Lane level	Lane	Destination arms	Total Demand (Veh/hr)	Capacity (Veh/hr)	RFC	Throughput (Veh/hr)	Average throughput (PCU/hr)	Start queue (Veh)	End queue (Veh)	Delay (s)	Unsignalised level of service
A - Standing Way (E)	Entry	1	1	B	135	1034	0.131	135	137	0.0	0.2	3.934	A
			2	A, C	696	1300	0.535	695	734	0.0	1.2	5.973	A
	Exit	1	1		1116			1116	1150	0.0	0.0	0.000	A
B - Whaddon Road	Entry	1	1	C	144	414	0.347	144	148	0.0	0.5	13.167	B
			2	A, B	135	418	0.322	136	139	0.0	0.5	13.107	B
		2	1	(A, B, C)	278			278	292	0.0	0.0	0.262	A
	Exit	1	1		217			217	224	0.0	0.0	0.000	A
C - Standing Way (W)	Entry	1	1	A	511	1000	0.511	513	530	0.0	0.7	5.227	A
			2	A, B, C	546	1003	0.544	548	565	0.0	0.8	5.465	A
		2	1	(A, B, C)	1057			1057	1101	0.0	0.0	0.000	A
	Exit	1	1		836			836	879	0.0	0.0	0.000	A

07:45 - 08:00

Arm	Side	Lane level	Lane	Destination arms	Total Demand (Veh/hr)	Capacity (Veh/hr)	RFC	Throughput (Veh/hr)	Average throughput (PCU/hr)	Start queue (Veh)	End queue (Veh)	Delay (s)	Unsignalised level of service
A - Standing Way (E)	Entry	1	1	B	162	1030	0.158	162	166	0.2	0.2	4.188	A
			2	A, C	830	1295	0.641	829	882	1.2	2.0	8.050	A
	Exit	1	1		1315			1315	1366	0.0	0.0	0.000	A
B - Whaddon Road	Entry	1	1	C	176	369	0.477	177	177	0.5	0.9	17.146	C
			2	A, B	163	374	0.437	163	167	0.5	0.7	16.491	C
		2	1	(A, B, C)	339			339	347	0.0	0.1	1.143	A
	Exit	1	1		260			260	270	0.0	0.0	0.000	A
C - Standing Way (W)	Entry	1	1	A	607	993	0.611	607	634	0.7	1.1	6.384	A
			2	A, B, C	639	993	0.644	639	665	0.8	1.3	6.673	A
		2	1	(A, B, C)	1246			1246	1303	0.0	0.0	0.000	A
	Exit	1	1		1003			1003	1055	0.0	0.0	0.000	A

08:00 - 08:15

Arm	Side	Lane level	Lane	Destination arms	Total Demand (Veh/hr)	Capacity (Veh/hr)	RFC	Throughput (Veh/hr)	Average throughput (PCU/hr)	Start queue (Veh)	End queue (Veh)	Delay (s)	Unsignalised level of service
A - Standing Way (E)	Entry	1	1	B	196	1024	0.191	196	201	0.2	0.2	4.350	A
			2	A, C	1021	1283	0.796	1020	1072	2.0	4.4	13.726	B
	Exit	1	1		1630			1630	1670	0.0	0.0	0.000	A
B - Whaddon Road	Entry	1	1	C	211	305	0.692	212	211	0.9	1.7	27.424	D
			2	A, B	201	309	0.649	199	198	0.7	1.8	27.746	D
		2	1	(A, B, C)	414			412	417	0.1	2.0	11.620	B
	Exit	1	1		319			319	327	0.0	0.0	0.000	A
C - Standing Way (W)	Entry	1	1	A	763	983	0.776	764	783	1.1	2.2	10.237	B
			2	A, B, C	787	979	0.804	787	809	1.3	2.4	10.516	B
		2	1	(A, B, C)	1549			1550	1602	0.0	0.0	0.090	A
	Exit	1	1		1230			1230	1278	0.0	0.0	0.000	A

08:15 - 08:30

Arm	Side	Lane level	Lane	Destination arms	Total Demand (Veh/hr)	Capacity (Veh/hr)	RFC	Throughput (Veh/hr)	Average throughput (PCU/hr)	Start queue (Veh)	End queue (Veh)	Delay (s)	Unsignalised level of service
A - Standing Way (E)	Entry	1	1	B	197	1023	0.193	197	201	0.2	0.2	4.346	A
			2	A, C	1023	1288	0.794	1027	1081	4.4	3.8	14.282	B
	Exit	1	1		1599			1599	1676	0.0	0.0	0.000	A
B - Whaddon Road	Entry	1	1	C	207	305	0.683	209	216	1.7	1.6	30.783	D
			2	A, B	201	307	0.652	202	205	1.8	1.7	32.270	D
		2	1	(A, B, C)	405			408	420	2.0	2.2	20.758	C
	Exit	1	1		316			316	328	0.0	0.0	0.000	A
C - Standing Way (W)	Entry	1	1	A	748	983	0.761	748	787	2.2	2.2	10.144	B
			2	A, B, C	764	979	0.781	765	807	2.4	2.3	10.495	B
		2	1	(A, B, C)	1513			1513	1593	0.0	0.0	0.041	A
	Exit	1	1		1233			1233	1293	0.0	0.0	0.000	A

08:30 - 08:45

Arm	Side	Lane level	Lane	Destination arms	Total Demand (Veh/hr)	Capacity (Veh/hr)	RFC	Throughput (Veh/hr)	Average throughput (PCU/hr)	Start queue (Veh)	End queue (Veh)	Delay (s)	Unsignalised level of service
A - Standing Way (E)	Entry	1	1	B	162	1031	0.157	162	163	0.2	0.2	4.228	A
			2	A, C	829	1294	0.641	827	888	3.8	2.0	8.462	A
	Exit	1	1		1325			1325	1383	0.0	0.0	0.000	A
B - Whaddon Road	Entry	1	1	C	171	370	0.462	172	186	1.6	0.8	20.986	C
			2	A, B	171	373	0.460	170	177	1.7	0.9	19.817	C
		2	1	(A, B, C)	342			342	355	2.2	0.1	5.468	A
	Exit	1	1		259			259	267	0.0	0.0	0.000	A
C - Standing Way (W)	Entry	1	1	A	603	992	0.608	603	634	2.2	1.1	6.751	A
			2	A, B, C	647	992	0.653	646	672	2.3	1.2	6.952	A
		2	1	(A, B, C)	1250			1250	1297	0.0	0.0	0.009	A
	Exit	1	1		996			996	1070	0.0	0.0	0.000	A

08:45 - 09:00

Arm	Side	Lane level	Lane	Destination arms	Total Demand (Veh/hr)	Capacity (Veh/hr)	RFC	Throughput (Veh/hr)	Average throughput (PCU/hr)	Start queue (Veh)	End queue (Veh)	Delay (s)	Unsignalised level of service
A - Standing Way (E)	Entry	1	1	B	140	1038	0.135	140	142	0.2	0.2	4.069	A
			2	A, C	692	1299	0.533	695	741	2.0	1.1	6.200	A
	Exit	1	1		1115			1115	1155	0.0	0.0	0.000	A
B - Whaddon Road	Entry	1	1	C	142	415	0.344	142	148	0.8	0.6	13.594	B
			2	A, B	142	417	0.341	141	141	0.9	0.6	13.754	B
		2	1	(A, B, C)	285			285	287	0.1	0.0	0.448	A
	Exit	1	1		217			217	227	0.0	0.0	0.000	A
C - Standing Way (W)	Entry	1	1	A	503	1002	0.503	504	531	1.1	0.7	5.426	A
			2	A, B, C	544	997	0.545	545	566	1.2	0.8	5.611	A
		2	1	(A, B, C)	1047			1047	1093	0.0	0.0	0.000	A
	Exit	1	1		835			835	886	0.0	0.0	0.000	A

2020 Base, PM

Data Errors and Warnings

Severity	Area	Item	Description
Warning	Lane Simulation	A1 - [Lane Simulation]	This analysis set uses Lane Simulation mode. This is provided as an investigative tool and the user should apply judgement when interpreting the results.
Warning	Geometry	C - Standing Way (W) - Roundabout Geometry	Effective flare length is over 30m, which is outside the normal range. Treat capacities with increasing caution.

Junction Network

Junctions

Junction	Name	Junction type	Use circulating lanes	Arm order	Junction Delay (s)	Junction LOS
J6	Bottledump Roundabout	Standard Roundabout		A, B, C	20.24	C

Junction Network Options

Driving side	Lighting
Left	Normal/unknown

Traffic Demand

Demand Set Details

ID	Scenario name	Time Period name	Traffic profile type	Start time (HH:mm)	Finish time (HH:mm)	Time segment length (min)	Run automatically
D2	2020 Base	PM	ONE HOUR	16:45	18:15	15	✓

Vehicle mix varies over turn	Vehicle mix varies over entry	Vehicle mix source	PCU Factor for a HV (PCU)
✓	✓	HV Percentages	2.00

Demand overview (Traffic)

Arm	Linked arm	Profile type	Use O-D data	Average Demand (Veh/hr)	Scaling Factor (%)
A - Standing Way (E)		ONE HOUR	✓	1287	100.000
B - Whaddon Road		ONE HOUR	✓	281	100.000
C - Standing Way (W)		ONE HOUR	✓	1227	100.000

Origin-Destination Data

Demand (Veh/hr)

		To		
		A - Standing Way (E)	B - Whaddon Road	C - Standing Way (W)
From	A - Standing Way (E)	2	194	1091
	B - Whaddon Road	153	0	128
	C - Standing Way (W)	1066	161	0

Proportions

		To		
		A - Standing Way (E)	B - Whaddon Road	C - Standing Way (W)
From	A - Standing Way (E)	0.00	0.15	0.85
	B - Whaddon Road	0.54	0.00	0.46
	C - Standing Way (W)	0.87	0.13	0.00

Vehicle Mix

Heavy Vehicle Percentages

		To		
		A - Standing Way (E)	B - Whaddon Road	C - Standing Way (W)
From	A - Standing Way (E)	50	1	2
	B - Whaddon Road	0	0	3
	C - Standing Way (W)	3	2	0

Average PCU Per Veh

		To		
		A - Standing Way (E)	B - Whaddon Road	C - Standing Way (W)
From	A - Standing Way (E)	1.500	1.010	1.020
	B - Whaddon Road	1.000	1.000	1.030
	C - Standing Way (W)	1.030	1.020	1.000

Detailed Demand Data

Demand for each time segment

Arm	Time Segment	Demand (Veh/hr)	Demand in PCU (PCU/hr)
A - Standing Way (E)	16:45-17:00	969	988
	17:00-17:15	1157	1179
	17:15-17:30	1417	1444
	17:30-17:45	1417	1444
	17:45-18:00	1157	1179
	18:00-18:15	969	988
B - Whaddon Road	16:45-17:00	212	214
	17:00-17:15	253	256
	17:15-17:30	309	314
	17:30-17:45	309	314
	17:45-18:00	253	256
	18:00-18:15	212	214
C - Standing Way (W)	16:45-17:00	924	950
	17:00-17:15	1103	1135
	17:15-17:30	1351	1390
	17:30-17:45	1351	1390
	17:45-18:00	1103	1135
	18:00-18:15	924	950

Results

Results Summary for whole modelled period

Arm	Max Delay (s)	Max Queue (Veh)	Max LOS	Average Demand (Veh/hr)	Total Junction Arrivals (Veh)
A - Standing Way (E)	29.08	11.7	D	1177	1766
B - Whaddon Road	37.42	3.3	E	256	385
C - Standing Way (W)	7.20	2.9	A	1124	1685

Main Results for each time segment

16:45 - 17:00

Arm	Total Demand (Veh/hr)	Junction Arrivals (Veh)	Circulating flow (Veh/hr)	Throughput (Veh/hr)	Average throughput (PCU/hr)	Throughput (exit side) (Veh/hr)	Start queue (Veh)	End queue (Veh)	Delay (s)	Unsignalised level of service
A - Standing Way (E)	961	240	122	960	980	925	0.0	1.8	6.479	A
B - Whaddon Road	214	54	818	216	214	265	0.0	0.8	13.257	B
C - Standing Way (W)	927	232	121	926	951	913	0.0	1.4	4.847	A

17:00 - 17:15

Arm	Total Demand (Veh/hr)	Junction Arrivals (Veh)	Circulating flow (Veh/hr)	Throughput (Veh/hr)	Average throughput (PCU/hr)	Throughput (exit side) (Veh/hr)	Start queue (Veh)	End queue (Veh)	Delay (s)	Unsignalised level of service
A - Standing Way (E)	1147	287	146	1150	1170	1091	1.8	3.1	9.029	A
B - Whaddon Road	243	61	972	244	252	325	0.8	1.0	16.202	C
C - Standing Way (W)	1098	275	136	1101	1131	1080	1.4	1.7	5.591	A

17:15 - 17:30

Arm	Total Demand (Veh/hr)	Junction Arrivals (Veh)	Circulating flow (Veh/hr)	Throughput (Veh/hr)	Average throughput (PCU/hr)	Throughput (exit side) (Veh/hr)	Start queue (Veh)	End queue (Veh)	Delay (s)	Unsignalised level of service
A - Standing Way (E)	1423	356	181	1406	1418	1338	3.1	9.9	21.477	C
B - Whaddon Road	309	77	1186	308	304	400	1.0	3.0	30.233	D
C - Standing Way (W)	1346	336	168	1350	1385	1326	1.7	2.3	7.205	A

17:30 - 17:45

Arm	Total Demand (Veh/hr)	Junction Arrivals (Veh)	Circulating flow (Veh/hr)	Throughput (Veh/hr)	Average throughput (PCU/hr)	Throughput (exit side) (Veh/hr)	Start queue (Veh)	End queue (Veh)	Delay (s)	Unsignalised level of service
A - Standing Way (E)	1415	354	175	1411	1436	1344	9.9	11.7	29.080	D
B - Whaddon Road	313	78	1195	310	312	392	3.0	3.3	37.415	E
C - Standing Way (W)	1351	338	169	1351	1382	1337	2.3	2.8	7.040	A

17:45 - 18:00

Arm	Total Demand (Veh/hr)	Junction Arrivals (Veh)	Circulating flow (Veh/hr)	Throughput (Veh/hr)	Average throughput (PCU/hr)	Throughput (exit side) (Veh/hr)	Start queue (Veh)	End queue (Veh)	Delay (s)	Unsignalised level of service
A - Standing Way (E)	1154	289	146	1152	1206	1101	11.7	3.3	13.789	B
B - Whaddon Road	253	63	983	253	268	315	3.3	1.3	23.579	C
C - Standing Way (W)	1107	277	137	1110	1146	1100	2.8	1.7	5.656	A

18:00 - 18:15

Arm	Total Demand (Veh/hr)	Junction Arrivals (Veh)	Circulating flow (Veh/hr)	Throughput (Veh/hr)	Average throughput (PCU/hr)	Throughput (exit side) (Veh/hr)	Start queue (Veh)	End queue (Veh)	Delay (s)	Unsignalised level of service
A - Standing Way (E)	963	241	116	970	989	915	3.3	1.4	6.617	A
B - Whaddon Road	205	51	824	205	220	262	1.3	0.8	13.469	B
C - Standing Way (W)	912	228	117	913	952	912	1.7	1.2	4.900	A

Lane Results

Lane Level notation: Lane Level 1 is always closest to the junction.

Lanes: Main Results for each time segment

16:45 - 17:00

Arm	Side	Lane level	Lane	Destination arms	Total Demand (Veh/hr)	Capacity (Veh/hr)	RFC	Throughput (Veh/hr)	Average throughput (PCU/hr)	Start queue (Veh)	End queue (Veh)	Delay (s)	Unsignalised level of service
A - Standing Way (E)	Entry	1	1	B	143	1037	0.138	142	142	0.0	0.2	4.048	A
			2	A, C	818	1335	0.613	818	838	0.0	1.7	6.893	A
	Exit	1	1		925			925	945	0.0	0.0	0.000	A
B - Whaddon Road	Entry	1	1	C	96	385	0.250	96	99	0.0	0.4	13.066	B
			2	A, B	118	395	0.299	120	115	0.0	0.3	13.245	B
		2	1	(A, B, C)	214			214	217	0.0	0.0	0.093	A
	Exit	1	1		265			265	265	0.0	0.0	0.000	A
C - Standing Way (W)	Entry	1	1	A	434	1021	0.425	434	448	0.0	0.6	4.695	A
			2	A, B, C	494	1021	0.483	492	504	0.0	0.8	4.982	A
		2	1	(A, B, C)	927			927	957	0.0	0.0	0.000	A
	Exit	1	1		913			913	935	0.0	0.0	0.000	A

17:00 - 17:15

Arm	Side	Lane level	Lane	Destination arms	Total Demand (Veh/hr)	Capacity (Veh/hr)	RFC	Throughput (Veh/hr)	Average throughput (PCU/hr)	Start queue (Veh)	End queue (Veh)	Delay (s)	Unsignalised level of service
A - Standing Way (E)	Entry	1	1	B	179	1030	0.174	178	176	0.2	0.2	4.025	A
			2	A, C	968	1330	0.729	972	994	1.7	2.9	9.922	A
	Exit	1	1		1091			1091	1122	0.0	0.0	0.000	A
B - Whaddon Road	Entry	1	1	C	109	333	0.329	110	116	0.4	0.4	15.746	C
			2	A, B	134	345	0.389	134	136	0.3	0.6	15.954	C
		2	1	(A, B, C)	243			244	253	0.0	0.0	0.342	A
	Exit	1	1		325			325	324	0.0	0.0	0.000	A
C - Standing Way (W)	Entry	1	1	A	520	1012	0.514	521	535	0.6	0.8	5.382	A
			2	A, B, C	578	1016	0.569	580	597	0.8	0.9	5.778	A
		2	1	(A, B, C)	1098			1098	1133	0.0	0.0	0.000	A
	Exit	1	1		1080			1080	1108	0.0	0.0	0.000	A

17:15 - 17:30

Arm	Side	Lane level	Lane	Destination arms	Total Demand (Veh/hr)	Capacity (Veh/hr)	RFC	Throughput (Veh/hr)	Average throughput (PCU/hr)	Start queue (Veh)	End queue (Veh)	Delay (s)	Unsignalised level of service
A - Standing Way (E)	Entry	1	1	B	220	1014	0.217	219	220	0.2	0.3	4.533	A
			2	A, C	1202	1312	0.916	1186	1198	2.9	9.6	24.556	C
	Exit	1	1		1338			1338	1368	0.0	0.0	0.000	A
B - Whaddon Road	Entry	1	1	C	141	267	0.530	142	144	0.4	1.0	24.669	C
			2	A, B	167	273	0.611	166	160	0.6	1.6	27.274	D
		2	1	(A, B, C)	309			308	310	0.0	0.5	4.040	A
	Exit	1	1		400			400	400	0.0	0.0	0.000	A
C - Standing Way (W)	Entry	1	1	A	647	1001	0.646	649	668	0.8	1.0	6.911	A
			2	A, B, C	699	1008	0.694	701	717	0.9	1.3	7.477	A
		2	1	(A, B, C)	1346			1346	1388	0.0	0.0	0.000	A
	Exit	1	1		1326			1326	1339	0.0	0.0	0.000	A

17:30 - 17:45

Arm	Side	Lane level	Lane	Destination arms	Total Demand (Veh/hr)	Capacity (Veh/hr)	RFC	Throughput (Veh/hr)	Average throughput (PCU/hr)	Start queue (Veh)	End queue (Veh)	Delay (s)	Unsignalised level of service
A - Standing Way (E)	Entry	1	1	B	215	1017	0.212	216	218	0.3	0.2	4.587	A
			2	A, C	1199	1317	0.910	1195	1218	9.6	11.5	33.470	D
	Exit	1	1		1344			1344	1377	0.0	0.0	0.000	A
B - Whaddon Road	Entry	1	1	C	143	266	0.539	144	144	1.0	1.0	27.589	D
			2	A, B	168	271	0.621	167	168	1.6	1.6	32.482	D
		2	1	(A, B, C)	313			312	313	0.5	0.7	7.042	A
	Exit	1	1		392			392	394	0.0	0.0	0.000	A
C - Standing Way (W)	Entry	1	1	A	654	1004	0.651	655	667	1.0	1.2	6.747	A
			2	A, B, C	698	1005	0.694	696	715	1.3	1.6	7.312	A
		2	1	(A, B, C)	1351			1351	1384	0.0	0.0	0.000	A
	Exit	1	1		1337			1337	1359	0.0	0.0	0.000	A

17:45 - 18:00

Arm	Side	Lane level	Lane	Destination arms	Total Demand (Veh/hr)	Capacity (Veh/hr)	RFC	Throughput (Veh/hr)	Average throughput (PCU/hr)	Start queue (Veh)	End queue (Veh)	Delay (s)	Unsignalised level of service
A - Standing Way (E)	Entry	1	1	B	169	1028	0.165	169	172	0.2	0.2	4.116	A
			2	A, C	985	1329	0.741	983	1034	11.5	3.1	15.469	C
	Exit	1	1		1101			1101	1140	0.0	0.0	0.000	A
B - Whaddon Road	Entry	1	1	C	118	329	0.358	117	124	1.0	0.6	19.602	C
			2	A, B	135	341	0.397	136	144	1.6	0.7	22.469	C
		2	1	(A, B, C)	253			253	262	0.7	0.0	2.783	A
	Exit	1	1		315			315	324	0.0	0.0	0.000	A
C - Standing Way (W)	Entry	1	1	A	523	1012	0.516	525	544	1.2	0.8	5.438	A
			2	A, B, C	585	1016	0.575	585	602	1.6	1.0	5.852	A
		2	1	(A, B, C)	1107			1107	1142	0.0	0.0	0.000	A
	Exit	1	1		1100			1100	1155	0.0	0.0	0.000	A

18:00 - 18:15

Arm	Side	Lane level	Lane	Destination arms	Total Demand (Veh/hr)	Capacity (Veh/hr)	RFC	Throughput (Veh/hr)	Average throughput (PCU/hr)	Start queue (Veh)	End queue (Veh)	Delay (s)	Unsignalised level of service
A - Standing Way (E)	Entry	1	1	B	146	1034	0.141	147	145	0.2	0.2	4.060	A
			2	A, C	817	1342	0.609	824	844	3.1	1.2	7.064	A
	Exit	1	1		915			915	951	0.0	0.0	0.000	A
B - Whaddon Road	Entry	1	1	C	92	382	0.243	91	100	0.6	0.4	12.734	B
			2	A, B	113	393	0.287	115	120	0.7	0.4	13.946	B
		2	1	(A, B, C)	205			205	218	0.0	0.0	0.075	A
	Exit	1	1		262			262	268	0.0	0.0	0.000	A
C - Standing Way (W)	Entry	1	1	A	425	1025	0.415	427	447	0.8	0.5	4.727	A
			2	A, B, C	487	1025	0.474	487	505	1.0	0.7	5.054	A
		2	1	(A, B, C)	912			912	950	0.0	0.0	0.000	A
	Exit	1	1		912			912	942	0.0	0.0	0.000	A

2033 Base, AM

Data Errors and Warnings

Severity	Area	Item	Description
Warning	Lane Simulation	A1 - [Lane Simulation]	This analysis set uses Lane Simulation mode. This is provided as an investigative tool and the user should apply judgement when interpreting the results.
Warning	Geometry	C - Standing Way (W) - Roundabout Geometry	Effective flare length is over 30m, which is outside the normal range. Treat capacities with increasing caution.

Junction Network

Junctions

Junction	Name	Junction type	Use circulating lanes	Arm order	Junction Delay (s)	Junction LOS
J6	Bottledump Roundabout	Standard Roundabout		A, B, C	54.01	F

Junction Network Options

Driving side	Lighting
Left	Normal/unknown

Traffic Demand

Demand Set Details

ID	Scenario name	Time Period name	Traffic profile type	Start time (HH:mm)	Finish time (HH:mm)	Time segment length (min)	Run automatically
D13	2033 Base	AM	ONE HOUR	07:30	09:00	15	✓

Vehicle mix varies over turn	Vehicle mix varies over entry	Vehicle mix source	PCU Factor for a HV (PCU)
✓	✓	HV Percentages	2.00

Demand overview (Traffic)

Arm	Linked arm	Profile type	Use O-D data	Average Demand (Veh/hr)	Scaling Factor (%)
A - Standing Way (E)		ONE HOUR	✓	1307	100.000
B - Whaddon Road		ONE HOUR	✓	434	100.000
C - Standing Way (W)		ONE HOUR	✓	1601	100.000

Origin-Destination Data

Demand (Veh/hr)

		To		
		A - Standing Way (E)	B - Whaddon Road	C - Standing Way (W)
From	A - Standing Way (E)	3	223	1080
	B - Whaddon Road	215	0	219
	C - Standing Way (W)	1477	124	0

Proportions

		To		
		A - Standing Way (E)	B - Whaddon Road	C - Standing Way (W)
From	A - Standing Way (E)	0.00	0.17	0.83
	B - Whaddon Road	0.50	0.00	0.50
	C - Standing Way (W)	0.92	0.08	0.00

Vehicle Mix

Heavy Vehicle Percentages

		To		
		A - Standing Way (E)	B - Whaddon Road	C - Standing Way (W)
From	A - Standing Way (E)	33	2	6
	B - Whaddon Road	2	0	3
	C - Standing Way (W)	4	6	0

Average PCU Per Veh

		To		
		A - Standing Way (E)	B - Whaddon Road	C - Standing Way (W)
From	A - Standing Way (E)	1.333	1.022	1.057
	B - Whaddon Road	1.022	1.000	1.026
	C - Standing Way (W)	1.042	1.056	1.000

Detailed Demand Data

Demand for each time segment

Arm	Time Segment	Demand (Veh/hr)	Demand in PCU (PCU/hr)
A - Standing Way (E)	07:30-07:45	984	1034
	07:45-08:00	1175	1235
	08:00-08:15	1439	1513
	08:15-08:30	1439	1513
	08:30-08:45	1175	1235
	08:45-09:00	984	1034
B - Whaddon Road	07:30-07:45	327	335
	07:45-08:00	390	400
	08:00-08:15	478	489
	08:15-08:30	478	489
	08:30-08:45	390	400
	08:45-09:00	327	335
C - Standing Way (W)	07:30-07:45	1205	1257
	07:45-08:00	1439	1502
	08:00-08:15	1763	1839
	08:15-08:30	1763	1839
	08:30-08:45	1439	1502
	08:45-09:00	1205	1257

Results

Results Summary for whole modelled period

Arm	Max Delay (s)	Max Queue (Veh)	Max LOS	Average Demand (Veh/hr)	Total Junction Arrivals (Veh)
A - Standing Way (E)	30.28	12.6	D	1200	1800
B - Whaddon Road	251.75	36.7	F	398	598
C - Standing Way (W)	20.83	10.8	C	1467	2201

Main Results for each time segment

07:30 - 07:45

Arm	Total Demand (Veh/hr)	Junction Arrivals (Veh)	Circulating flow (Veh/hr)	Throughput (Veh/hr)	Average throughput (PCU/hr)	Throughput (exit side) (Veh/hr)	Start queue (Veh)	End queue (Veh)	Delay (s)	Unsignalised level of service
A - Standing Way (E)	1001	250	95	1000	1030	1264	0.0	2.0	7.049	A
B - Whaddon Road	322	81	830	323	325	265	0.0	1.7	17.253	C
C - Standing Way (W)	1186	296	165	1194	1242	987	0.0	1.6	6.179	A

07:45 - 08:00

Arm	Total Demand (Veh/hr)	Junction Arrivals (Veh)	Circulating flow (Veh/hr)	Throughput (Veh/hr)	Average throughput (PCU/hr)	Throughput (exit side) (Veh/hr)	Start queue (Veh)	End queue (Veh)	Delay (s)	Unsignalised level of service
A - Standing Way (E)	1180	295	118	1181	1225	1524	2.0	2.8	9.700	A
B - Whaddon Road	396	99	972	393	397	327	1.7	4.1	31.385	D
C - Standing Way (W)	1450	363	197	1446	1502	1168	1.6	3.9	8.562	A

08:00 - 08:15

Arm	Total Demand (Veh/hr)	Junction Arrivals (Veh)	Circulating flow (Veh/hr)	Throughput (Veh/hr)	Average throughput (PCU/hr)	Throughput (exit side) (Veh/hr)	Start queue (Veh)	End queue (Veh)	Delay (s)	Unsignalised level of service
A - Standing Way (E)	1433	358	136	1419	1471	1817	2.8	10.5	22.174	C
B - Whaddon Road	479	120	1172	404	421	384	4.1	20.0	104.864	F
C - Standing Way (W)	1760	440	205	1748	1817	1371	3.9	10.0	17.773	C

08:15 - 08:30

Arm	Total Demand (Veh/hr)	Junction Arrivals (Veh)	Circulating flow (Veh/hr)	Throughput (Veh/hr)	Average throughput (PCU/hr)	Throughput (exit side) (Veh/hr)	Start queue (Veh)	End queue (Veh)	Delay (s)	Unsignalised level of service
A - Standing Way (E)	1432	358	141	1422	1503	1815	10.5	12.5	30.283	D
B - Whaddon Road	475	119	1176	412	426	387	20.0	36.7	251.747	F
C - Standing Way (W)	1759	440	208	1748	1834	1380	10.0	10.9	20.834	C

08:30 - 08:45

Arm	Total Demand (Veh/hr)	Junction Arrivals (Veh)	Circulating flow (Veh/hr)	Throughput (Veh/hr)	Average throughput (PCU/hr)	Throughput (exit side) (Veh/hr)	Start queue (Veh)	End queue (Veh)	Delay (s)	Unsignalised level of service
A - Standing Way (E)	1166	291	112	1164	1262	1587	12.5	3.3	13.744	B
B - Whaddon Road	391	98	960	485	483	317	36.7	17.4	211.879	F
C - Standing Way (W)	1449	362	243	1456	1544	1202	10.9	3.4	10.902	B

08:45 - 09:00

Arm	Total Demand (Veh/hr)	Junction Arrivals (Veh)	Circulating flow (Veh/hr)	Throughput (Veh/hr)	Average throughput (PCU/hr)	Throughput (exit side) (Veh/hr)	Start queue (Veh)	End queue (Veh)	Delay (s)	Unsignalised level of service
A - Standing Way (E)	987	247	94	986	1039	1278	3.3	2.1	7.298	A
B - Whaddon Road	329	82	822	343	400	258	17.4	2.0	48.607	E
C - Standing Way (W)	1201	300	173	1199	1264	992	3.4	2.3	6.620	A

Lane Results

Lane Level notation: Lane Level 1 is always closest to the junction.

Lanes: Main Results for each time segment

07:30 - 07:45

Arm	Side	Lane level	Lane	Destination arms	Total Demand (Veh/hr)	Capacity (Veh/hr)	RFC	Throughput (Veh/hr)	Average throughput (PCU/hr)	Start queue (Veh)	End queue (Veh)	Delay (s)	Unsignalised level of service
A - Standing Way (E)	Entry	1	1	B	169	1023	0.165	170	169	0.0	0.2	4.242	A
			2	A, C	832	1300	0.640	830	860	0.0	1.8	7.616	A
	Exit	1	1		1264			1264	1310	0.0	0.0	0.000	A
B - Whaddon Road	Entry	1	1	C	160	372	0.429	160	162	0.0	0.7	16.327	C
			2	A, B	163	373	0.435	163	163	0.0	0.8	16.578	C
		2	1	(A, B, C)	322			322	331	0.0	0.1	0.776	A
	Exit	1	1		265			265	267	0.0	0.0	0.000	A
C - Standing Way (W)	Entry	1	1	A	579	993	0.583	583	603	0.0	0.8	6.049	A
			2	A, B, C	606	988	0.614	611	638	0.0	0.8	6.303	A
		2	1	(A, B, C)	1186			1186	1249	0.0	0.0	0.000	A
	Exit	1	1		987			987	1019	0.0	0.0	0.000	A

07:45 - 08:00

Arm	Side	Lane level	Lane	Destination arms	Total Demand (Veh/hr)	Capacity (Veh/hr)	RFC	Throughput (Veh/hr)	Average throughput (PCU/hr)	Start queue (Veh)	End queue (Veh)	Delay (s)	Unsignalised level of service
A - Standing Way (E)	Entry	1	1	B	208	1025	0.203	209	206	0.2	0.2	4.438	A
			2	A, C	971	1291	0.754	972	1020	1.8	2.6	10.793	B
	Exit	1	1		1524			1524	1583	0.0	0.0	0.000	A
B - Whaddon Road	Entry	1	1	C	201	324	0.621	199	201	0.7	1.5	23.485	C
			2	A, B	195	324	0.602	194	196	0.8	1.6	24.394	C
		2	1	(A, B, C)	396			396	403	0.1	1.0	7.257	A
	Exit	1	1		327			327	325	0.0	0.0	0.000	A
C - Standing Way (W)	Entry	1	1	A	713	980	0.727	710	738	0.8	1.8	8.380	A
			2	A, B, C	737	980	0.752	735	764	0.8	2.1	8.735	A
		2	1	(A, B, C)	1450			1450	1512	0.0	0.0	0.001	A
	Exit	1	1		1168			1168	1216	0.0	0.0	0.000	A

08:00 - 08:15

Arm	Side	Lane level	Lane	Destination arms	Total Demand (Veh/hr)	Capacity (Veh/hr)	RFC	Throughput (Veh/hr)	Average throughput (PCU/hr)	Start queue (Veh)	End queue (Veh)	Delay (s)	Unsignalised level of service
A - Standing Way (E)	Entry	1	1	B	247	1015	0.243	248	250	0.2	0.3	4.607	A
			2	A, C	1186	1286	0.923	1172	1221	2.6	10.2	25.801	D
	Exit	1	1		1817			1817	1886	0.0	0.0	0.000	A
B - Whaddon Road	Entry	1	1	C	207	259	0.800	203	212	1.5	2.7	38.180	E
			2	A, B	203	260	0.783	201	209	1.6	2.9	43.856	E
		2	1	(A, B, C)	479			410	431	1.0	14.4	62.846	F
	Exit	1	1		384			384	395	0.0	0.0	0.000	A
C - Standing Way (W)	Entry	1	1	A	883	978	0.902	879	902	1.8	4.4	16.134	C
			2	A, B, C	873	976	0.894	868	915	2.1	4.5	16.676	C
		2	1	(A, B, C)	1760			1756	1838	0.0	1.0	1.322	A
	Exit	1	1		1371			1371	1428	0.0	0.0	0.000	A

08:15 - 08:30

Arm	Side	Lane level	Lane	Destination arms	Total Demand (Veh/hr)	Capacity (Veh/hr)	RFC	Throughput (Veh/hr)	Average throughput (PCU/hr)	Start queue (Veh)	End queue (Veh)	Delay (s)	Unsignalised level of service
A - Standing Way (E)	Entry	1	1	B	247	1021	0.242	246	255	0.3	0.4	4.652	A
			2	A, C	1185	1285	0.923	1176	1248	10.2	12.1	35.680	E
	Exit	1	1		1815			1815	1901	0.0	0.0	0.000	A
B - Whaddon Road	Entry	1	1	C	208	256	0.810	208	217	2.7	3.0	46.687	E
			2	A, B	202	259	0.781	205	209	2.9	2.7	51.597	F
		2	1	(A, B, C)	475			410	427	14.4	31.0	203.437	F
	Exit	1	1		387			387	403	0.0	0.0	0.000	A
C - Standing Way (W)	Entry	1	1	A	875	977	0.896	871	910	4.4	4.6	18.078	C
			2	A, B, C	876	974	0.899	877	924	4.5	4.6	18.579	C
		2	1	(A, B, C)	1759			1751	1835	1.0	1.7	2.485	A
	Exit	1	1		1380			1380	1460	0.0	0.0	0.000	A

08:30 - 08:45

Arm	Side	Lane level	Lane	Destination arms	Total Demand (Veh/hr)	Capacity (Veh/hr)	RFC	Throughput (Veh/hr)	Average throughput (PCU/hr)	Start queue (Veh)	End queue (Veh)	Delay (s)	Unsignalised level of service
A - Standing Way (E)	Entry	1	1	B	204	1029	0.198	204	203	0.4	0.3	4.471	A
			2	A, C	962	1295	0.742	960	1059	12.1	3.0	15.654	C
	Exit	1	1		1587			1587	1667	0.0	0.0	0.000	A
B - Whaddon Road	Entry	1	1	C	239	330	0.725	245	245	3.0	1.8	36.887	E
			2	A, B	234	330	0.709	240	237	2.7	2.3	42.366	E
		2	1	(A, B, C)	391			473	476	31.0	13.4	174.727	F
	Exit	1	1		317			317	322	0.0	0.0	0.000	A
C - Standing Way (W)	Entry	1	1	A	712	967	0.736	715	758	4.6	1.7	10.382	B
			2	A, B, C	737	961	0.766	741	786	4.6	1.7	10.611	B
		2	1	(A, B, C)	1449			1449	1521	1.7	0.0	0.510	A
	Exit	1	1		1202			1202	1300	0.0	0.0	0.000	A

08:45 - 09:00

Arm	Side	Lane level	Lane	Destination arms	Total Demand (Veh/hr)	Capacity (Veh/hr)	RFC	Throughput (Veh/hr)	Average throughput (PCU/hr)	Start queue (Veh)	End queue (Veh)	Delay (s)	Unsignalised level of service
A - Standing Way (E)	Entry	1	1	B	164	1030	0.159	164	172	0.3	0.2	4.110	A
			2	A, C	823	1305	0.630	822	867	3.0	1.9	7.955	A
	Exit	1	1		1278			1278	1365	0.0	0.0	0.000	A
B - Whaddon Road	Entry	1	1	C	171	377	0.455	173	201	1.8	0.7	22.278	C
			2	A, B	168	377	0.445	170	198	2.3	0.7	24.643	C
		2	1	(A, B, C)	329			339	389	13.4	0.5	27.129	D
	Exit	1	1		258			258	273	0.0	0.0	0.000	A
C - Standing Way (W)	Entry	1	1	A	586	993	0.591	585	613	1.7	1.1	6.531	A
			2	A, B, C	615	986	0.624	614	651	1.7	1.2	6.703	A
		2	1	(A, B, C)	1201			1201	1259	0.0	0.0	0.000	A
	Exit	1	1		992			992	1065	0.0	0.0	0.000	A

2033 Base, PM

Data Errors and Warnings

Severity	Area	Item	Description
Warning	Lane Simulation	A1 - [Lane Simulation]	This analysis set uses Lane Simulation mode. This is provided as an investigative tool and the user should apply judgement when interpreting the results.
Warning	Geometry	C - Standing Way (W) - Roundabout Geometry	Effective flare length is over 30m, which is outside the normal range. Treat capacities with increasing caution.

Junction Network

Junctions

Junction	Name	Junction type	Use circulating lanes	Arm order	Junction Delay (s)	Junction LOS
J6	Bottledump Roundabout	Standard Roundabout		A, B, C	74.39	F

Junction Network Options

Driving side	Lighting
Left	Normal/unknown

Traffic Demand

Demand Set Details

ID	Scenario name	Time Period name	Traffic profile type	Start time (HH:mm)	Finish time (HH:mm)	Time segment length (min)	Run automatically
D14	2033 Base	PM	ONE HOUR	16:45	18:15	15	✓

Vehicle mix varies over turn	Vehicle mix varies over entry	Vehicle mix source	PCU Factor for a HV (PCU)
✓	✓	HV Percentages	2.00

Demand overview (Traffic)

Arm	Linked arm	Profile type	Use O-D data	Average Demand (Veh/hr)	Scaling Factor (%)
A - Standing Way (E)		ONE HOUR	✓	1501	100.000
B - Whaddon Road		ONE HOUR	✓	338	100.000
C - Standing Way (W)		ONE HOUR	✓	1437	100.000

Origin-Destination Data

Demand (Veh/hr)

		To		
		A - Standing Way (E)	B - Whaddon Road	C - Standing Way (W)
From	A - Standing Way (E)	2	230	1269
	B - Whaddon Road	190	0	148
	C - Standing Way (W)	1251	186	0

Proportions

		To		
		A - Standing Way (E)	B - Whaddon Road	C - Standing Way (W)
From	A - Standing Way (E)	0.00	0.15	0.85
	B - Whaddon Road	0.56	0.00	0.44
	C - Standing Way (W)	0.87	0.13	0.00

Vehicle Mix

Heavy Vehicle Percentages

		To		
		A - Standing Way (E)	B - Whaddon Road	C - Standing Way (W)
From	A - Standing Way (E)	50	1	2
	B - Whaddon Road	0	0	3
	C - Standing Way (W)	3	2	0

Average PCU Per Veh

		To		
		A - Standing Way (E)	B - Whaddon Road	C - Standing Way (W)
From	A - Standing Way (E)	1.500	1.010	1.018
	B - Whaddon Road	1.000	1.000	1.031
	C - Standing Way (W)	1.025	1.019	1.000

Detailed Demand Data

Demand for each time segment

Arm	Time Segment	Demand (Veh/hr)	Demand in PCU (PCU/hr)
A - Standing Way (E)	16:45-17:00	1130	1150
	17:00-17:15	1350	1374
	17:15-17:30	1653	1682
	17:30-17:45	1653	1682
	17:45-18:00	1350	1374
	18:00-18:15	1130	1150
B - Whaddon Road	16:45-17:00	254	258
	17:00-17:15	303	308
	17:15-17:30	372	377
	17:30-17:45	372	377
	17:45-18:00	303	308
	18:00-18:15	254	258
C - Standing Way (W)	16:45-17:00	1082	1108
	17:00-17:15	1292	1323
	17:15-17:30	1582	1621
	17:30-17:45	1582	1621
	17:45-18:00	1292	1323
	18:00-18:15	1082	1108

Results

Results Summary for whole modelled period

Arm	Max Delay (s)	Max Queue (Veh)	Max LOS	Average Demand (Veh/hr)	Total Junction Arrivals (Veh)
A - Standing Way (E)	122.32	64.4	F	1379	2069
B - Whaddon Road	132.80	14.6	F	310	465
C - Standing Way (W)	10.93	5.1	B	1318	1977

Main Results for each time segment

16:45 - 17:00

Arm	Total Demand (Veh/hr)	Junction Arrivals (Veh)	Circulating flow (Veh/hr)	Throughput (Veh/hr)	Average throughput (PCU/hr)	Throughput (exit side) (Veh/hr)	Start queue (Veh)	End queue (Veh)	Delay (s)	Unsignalised level of service
A - Standing Way (E)	1138	285	141	1138	1145	1098	0.0	2.7	8.362	A
B - Whaddon Road	260	65	965	259	256	314	0.0	1.3	17.136	C
C - Standing Way (W)	1090	273	148	1091	1103	1076	0.0	1.6	5.464	A

17:00 - 17:15

Arm	Total Demand (Veh/hr)	Junction Arrivals (Veh)	Circulating flow (Veh/hr)	Throughput (Veh/hr)	Average throughput (PCU/hr)	Throughput (exit side) (Veh/hr)	Start queue (Veh)	End queue (Veh)	Delay (s)	Unsignalised level of service
A - Standing Way (E)	1342	335	167	1340	1353	1304	2.7	6.6	15.713	C
B - Whaddon Road	308	77	1133	310	303	374	1.3	2.6	28.632	D
C - Standing Way (W)	1294	324	175	1296	1328	1268	1.6	2.2	6.793	A

17:15 - 17:30

Arm	Total Demand (Veh/hr)	Junction Arrivals (Veh)	Circulating flow (Veh/hr)	Throughput (Veh/hr)	Average throughput (PCU/hr)	Throughput (exit side) (Veh/hr)	Start queue (Veh)	End queue (Veh)	Delay (s)	Unsignalised level of service
A - Standing Way (E)	1662	415	208	1546	1557	1565	6.6	37.7	55.932	F
B - Whaddon Road	366	91	1292	340	345	462	2.6	10.1	74.969	F
C - Standing Way (W)	1584	396	196	1577	1611	1436	2.2	4.8	10.220	B

17:30 - 17:45

Arm	Total Demand (Veh/hr)	Junction Arrivals (Veh)	Circulating flow (Veh/hr)	Throughput (Veh/hr)	Average throughput (PCU/hr)	Throughput (exit side) (Veh/hr)	Start queue (Veh)	End queue (Veh)	Delay (s)	Unsignalised level of service
A - Standing Way (E)	1655	414	203	1558	1584	1563	37.7	64.1	122.316	F
B - Whaddon Road	370	93	1297	351	356	464	10.1	14.6	132.803	F
C - Standing Way (W)	1577	394	201	1565	1621	1447	4.8	5.1	10.932	B

17:45 - 18:00

Arm	Total Demand (Veh/hr)	Junction Arrivals (Veh)	Circulating flow (Veh/hr)	Throughput (Veh/hr)	Average throughput (PCU/hr)	Throughput (exit side) (Veh/hr)	Start queue (Veh)	End queue (Veh)	Delay (s)	Unsignalised level of service
A - Standing Way (E)	1337	334	173	1463	1514	1304	64.1	28.7	107.078	F
B - Whaddon Road	308	77	1255	330	336	381	14.6	8.3	115.496	F
C - Standing Way (W)	1291	323	186	1290	1336	1399	5.1	2.7	7.209	A

18:00 - 18:15

Arm	Total Demand (Veh/hr)	Junction Arrivals (Veh)	Circulating flow (Veh/hr)	Throughput (Veh/hr)	Average throughput (PCU/hr)	Throughput (exit side) (Veh/hr)	Start queue (Veh)	End queue (Veh)	Delay (s)	Unsignalised level of service
A - Standing Way (E)	1140	285	140	1168	1251	1082	28.7	4.5	29.474	D
B - Whaddon Road	251	63	993	258	281	315	8.3	1.5	40.252	E
C - Standing Way (W)	1070	268	149	1073	1110	1102	2.7	1.5	5.663	A

Lane Results

Lane Level notation: Lane Level 1 is always closest to the junction.

Lanes: Main Results for each time segment

16:45 - 17:00

Arm	Side	Lane level	Lane	Destination arms	Total Demand (Veh/hr)	Capacity (Veh/hr)	RFC	Throughput (Veh/hr)	Average throughput (PCU/hr)	Start queue (Veh)	End queue (Veh)	Delay (s)	Unsignalised level of service
A - Standing Way (E)	Entry	1	1	B	173	1029	0.168	173	174	0.0	0.2	4.156	A
			2	A, C	965	1330	0.725	965	971	0.0	2.5	9.119	A
	Exit	1	1		1098			1098	1107	0.0	0.0	0.000	A
B - Whaddon Road	Entry	1	1	C	113	337	0.337	112	113	0.0	0.5	15.738	C
			2	A, B	146	346	0.421	146	143	0.0	0.7	17.530	C
		2	1	(A, B, C)	260			259	261	0.0	0.0	0.372	A
	Exit	1	1		314			314	316	0.0	0.0	0.000	A
C - Standing Way (W)	Entry	1	1	A	517	1015	0.509	517	522	0.0	0.7	5.250	A
			2	A, B, C	573	1020	0.562	573	580	0.0	0.9	5.655	A
		2	1	(A, B, C)	1090			1090	1109	0.0	0.0	0.000	A
	Exit	1	1		1076			1076	1081	0.0	0.0	0.000	A

17:00 - 17:15

Arm	Side	Lane level	Lane	Destination arms	Total Demand (Veh/hr)	Capacity (Veh/hr)	RFC	Throughput (Veh/hr)	Average throughput (PCU/hr)	Start queue (Veh)	End queue (Veh)	Delay (s)	Unsignalised level of service
A - Standing Way (E)	Entry	1	1	B	207	1022	0.203	207	210	0.2	0.2	4.568	A
			2	A, C	1134	1320	0.859	1133	1143	2.5	6.3	17.747	C
	Exit	1	1		1304			1304	1328	0.0	0.0	0.000	A
B - Whaddon Road	Entry	1	1	C	136	282	0.482	136	135	0.5	0.9	22.327	C
			2	A, B	173	292	0.593	174	169	0.7	1.4	27.071	D
		2	1	(A, B, C)	308			309	307	0.0	0.3	3.535	A
	Exit	1	1		374			374	382	0.0	0.0	0.000	A
C - Standing Way (W)	Entry	1	1	A	619	1006	0.616	621	633	0.7	1.0	6.586	A
			2	A, B, C	675	1007	0.670	676	695	0.9	1.2	6.982	A
		2	1	(A, B, C)	1294			1294	1330	0.0	0.0	0.000	A
	Exit	1	1		1268			1268	1275	0.0	0.0	0.000	A

17:15 - 17:30

Arm	Side	Lane level	Lane	Destination arms	Total Demand (Veh/hr)	Capacity (Veh/hr)	RFC	Throughput (Veh/hr)	Average throughput (PCU/hr)	Start queue (Veh)	End queue (Veh)	Delay (s)	Unsignalised level of service
A - Standing Way (E)	Entry	1	1	B	254	1009	0.252	253	257	0.2	0.4	4.734	A
			2	A, C	1408	1306	1.077	1292	1300	6.3	37.3	65.253	F
	Exit	1	1		1565			1565	1597	0.0	0.0	0.000	A
B - Whaddon Road	Entry	1	1	C	146	233	0.625	146	152	0.9	1.5	35.463	E
			2	A, B	198	240	0.824	194	193	1.4	3.0	47.534	E
		2	1	(A, B, C)	366			343	355	0.3	5.6	31.567	D
	Exit	1	1		462			462	467	0.0	0.0	0.000	A
C - Standing Way (W)	Entry	1	1	A	770	1000	0.770	767	782	1.0	2.2	9.930	A
			2	A, B, C	814	1003	0.813	810	829	1.2	2.5	10.454	B
		2	1	(A, B, C)	1584			1584	1621	0.0	0.1	0.015	A
	Exit	1	1		1436			1436	1449	0.0	0.0	0.000	A

17:30 - 17:45

Arm	Side	Lane level	Lane	Destination arms	Total Demand (Veh/hr)	Capacity (Veh/hr)	RFC	Throughput (Veh/hr)	Average throughput (PCU/hr)	Start queue (Veh)	End queue (Veh)	Delay (s)	Unsignalised level of service
A - Standing Way (E)	Entry	1	1	B	262	1011	0.260	262	261	0.4	0.4	4.768	A
			2	A, C	1392	1309	1.066	1297	1323	37.3	63.7	143.907	F
	Exit	1	1		1563			1563	1614	0.0	0.0	0.000	A
B - Whaddon Road	Entry	1	1	C	153	231	0.663	153	159	1.5	1.8	41.426	E
			2	A, B	201	239	0.841	198	197	3.0	3.4	58.112	F
		2	1	(A, B, C)	370			354	359	5.6	9.5	81.719	F
	Exit	1	1		464			464	468	0.0	0.0	0.000	A
C - Standing Way (W)	Entry	1	1	A	768	998	0.770	762	789	2.2	2.4	10.586	B
			2	A, B, C	809	998	0.810	803	832	2.5	2.6	11.143	B
		2	1	(A, B, C)	1577			1577	1622	0.1	0.1	0.061	A
	Exit	1	1		1447			1447	1479	0.0	0.0	0.000	A

17:45 - 18:00

Arm	Side	Lane level	Lane	Destination arms	Total Demand (Veh/hr)	Capacity (Veh/hr)	RFC	Throughput (Veh/hr)	Average throughput (PCU/hr)	Start queue (Veh)	End queue (Veh)	Delay (s)	Unsignalised level of service
A - Standing Way (E)	Entry	1	1	B	208	1018	0.205	208	210	0.4	0.4	4.477	A
			2	A, C	1128	1319	0.856	1255	1304	63.7	28.3	125.825	F
	Exit	1	1		1304			1304	1351	0.0	0.0	0.000	A
B - Whaddon Road	Entry	1	1	C	142	244	0.586	146	149	1.8	1.3	38.098	E
			2	A, B	182	252	0.722	184	187	3.4	2.4	52.671	F
		2	1	(A, B, C)	308			324	330	9.5	4.6	70.448	F
	Exit	1	1		381			381	385	0.0	0.0	0.000	A
C - Standing Way (W)	Entry	1	1	A	614	1003	0.613	615	640	2.4	1.2	6.956	A
			2	A, B, C	677	1007	0.672	676	696	2.6	1.5	7.415	A
		2	1	(A, B, C)	1291			1291	1326	0.1	0.0	0.019	A
	Exit	1	1		1399			1399	1449	0.0	0.0	0.000	A

18:00 - 18:15

Arm	Side	Lane level	Lane	Destination arms	Total Demand (Veh/hr)	Capacity (Veh/hr)	RFC	Throughput (Veh/hr)	Average throughput (PCU/hr)	Start queue (Veh)	End queue (Veh)	Delay (s)	Unsignalised level of service
A - Standing Way (E)	Entry	1	1	B	175	1029	0.170	175	177	0.4	0.2	4.329	A
			2	A, C	966	1332	0.725	993	1074	28.3	4.4	34.106	D
	Exit	1	1		1082			1082	1130	0.0	0.0	0.000	A
B - Whaddon Road	Entry	1	1	C	111	328	0.338	111	123	1.3	0.6	23.655	C
			2	A, B	145	338	0.430	147	159	2.4	0.8	30.877	D
		2	1	(A, B, C)	251			256	272	4.6	0.1	14.108	B
	Exit	1	1		315			315	319	0.0	0.0	0.000	A
C - Standing Way (W)	Entry	1	1	A	504	1016	0.496	505	524	1.2	0.7	5.529	A
			2	A, B, C	566	1016	0.558	568	586	1.5	0.8	5.782	A
		2	1	(A, B, C)	1070			1070	1105	0.0	0.0	0.000	A
	Exit	1	1		1102			1102	1193	0.0	0.0	0.000	A

2033 Base + CD + D, AM

Data Errors and Warnings

Severity	Area	Item	Description
Warning	Lane Simulation	A1 - [Lane Simulation]	This analysis set uses Lane Simulation mode. This is provided as an investigative tool and the user should apply judgement when interpreting the results.
Last Run	Lane Simulation	B - Whaddon Road - Lane Simulation	Arm B: Queue at end of modelled period is greater than 10 PCU. Delay is likely to have been underestimated.
Warning	Geometry	C - Standing Way (W) - Roundabout Geometry	Effective flare length is over 30m, which is outside the normal range. Treat capacities with increasing caution.

Junction Network

Junctions

Junction	Name	Junction type	Use circulating lanes	Arm order	Junction Delay (s)	Junction LOS
J6	Bottledump Roundabout	Standard Roundabout		A, B, C	176.27	F

Junction Network Options

Driving side	Lighting
Left	Normal/unknown

Traffic Demand

Demand Set Details

ID	Scenario name	Time Period name	Traffic profile type	Start time (HH:mm)	Finish time (HH:mm)	Time segment length (min)	Run automatically
D15	2033 Base + CD + D	AM	ONE HOUR	07:30	09:00	15	✓

Vehicle mix varies over turn	Vehicle mix varies over entry	Vehicle mix source	PCU Factor for a HV (PCU)
✓	✓	HV Percentages	2.00

Demand overview (Traffic)

Arm	Linked arm	Profile type	Use O-D data	Average Demand (Veh/hr)	Scaling Factor (%)
A - Standing Way (E)		ONE HOUR	✓	1331	100.000
B - Whaddon Road		ONE HOUR	✓	581	100.000
C - Standing Way (W)		ONE HOUR	✓	1654	100.000

Origin-Destination Data

Demand (Veh/hr)

		To		
		A - Standing Way (E)	B - Whaddon Road	C - Standing Way (W)
From	A - Standing Way (E)	3	223	1104
	B - Whaddon Road	320	0	261
	C - Standing Way (W)	1480	174	0

Proportions

		To		
		A - Standing Way (E)	B - Whaddon Road	C - Standing Way (W)
From	A - Standing Way (E)	0.00	0.17	0.83
	B - Whaddon Road	0.55	0.00	0.45
	C - Standing Way (W)	0.89	0.11	0.00

Vehicle Mix

Heavy Vehicle Percentages

		To		
		A - Standing Way (E)	B - Whaddon Road	C - Standing Way (W)
From	A - Standing Way (E)	33	2	6
	B - Whaddon Road	2	0	3
	C - Standing Way (W)	4	6	0

Average PCU Per Veh

		To		
		A - Standing Way (E)	B - Whaddon Road	C - Standing Way (W)
From	A - Standing Way (E)	1.333	1.022	1.057
	B - Whaddon Road	1.022	1.000	1.026
	C - Standing Way (W)	1.042	1.056	1.000

Detailed Demand Data

Demand for each time segment

Arm	Time Segment	Demand (Veh/hr)	Demand in PCU (PCU/hr)
A - Standing Way (E)	07:30-07:45	1002	1054
	07:45-08:00	1197	1258
	08:00-08:15	1466	1541
	08:15-08:30	1466	1541
	08:30-08:45	1197	1258
	08:45-09:00	1002	1054
B - Whaddon Road	07:30-07:45	437	448
	07:45-08:00	522	535
	08:00-08:15	640	655
	08:15-08:30	640	655
	08:30-08:45	522	535
	08:45-09:00	437	448
C - Standing Way (W)	07:30-07:45	1245	1299
	07:45-08:00	1487	1551
	08:00-08:15	1821	1900
	08:15-08:30	1821	1900
	08:30-08:45	1487	1551
	08:45-09:00	1245	1299

Results

Results Summary for whole modelled period

Arm	Max Delay (s)	Max Queue (Veh)	Max LOS	Average Demand (Veh/hr)	Total Junction Arrivals (Veh)
A - Standing Way (E)	45.73	20.9	E	1217	1825
B - Whaddon Road	893.67	137.3	F	533	799
C - Standing Way (W)	33.57	20.0	D	1509	2263

Main Results for each time segment

07:30 - 07:45

Arm	Total Demand (Veh/hr)	Junction Arrivals (Veh)	Circulating flow (Veh/hr)	Throughput (Veh/hr)	Average throughput (PCU/hr)	Throughput (exit side) (Veh/hr)	Start queue (Veh)	End queue (Veh)	Delay (s)	Unsignalised level of service
A - Standing Way (E)	1012	253	126	1010	1051	1364	0.0	2.0	7.493	A
B - Whaddon Road	434	108	844	428	434	292	0.0	4.0	27.325	D
C - Standing Way (W)	1246	312	242	1249	1293	1030	0.0	2.6	7.042	A

07:45 - 08:00

Arm	Total Demand (Veh/hr)	Junction Arrivals (Veh)	Circulating flow (Veh/hr)	Throughput (Veh/hr)	Average throughput (PCU/hr)	Throughput (exit side) (Veh/hr)	Start queue (Veh)	End queue (Veh)	Delay (s)	Unsignalised level of service
A - Standing Way (E)	1192	298	151	1194	1248	1592	2.0	4.4	11.959	B
B - Whaddon Road	520	130	1000	482	490	345	4.0	14.6	75.573	F
C - Standing Way (W)	1475	369	269	1473	1537	1213	2.6	4.2	10.443	B

08:00 - 08:15

Arm	Total Demand (Veh/hr)	Junction Arrivals (Veh)	Circulating flow (Veh/hr)	Throughput (Veh/hr)	Average throughput (PCU/hr)	Throughput (exit side) (Veh/hr)	Start queue (Veh)	End queue (Veh)	Delay (s)	Unsignalised level of service
A - Standing Way (E)	1461	365	193	1436	1493	1822	4.4	14.5	27.337	D
B - Whaddon Road	645	161	1196	400	436	432	14.6	68.3	356.451	F
C - Standing Way (W)	1804	451	219	1796	1851	1378	4.2	14.0	23.917	C

08:15 - 08:30

Arm	Total Demand (Veh/hr)	Junction Arrivals (Veh)	Circulating flow (Veh/hr)	Throughput (Veh/hr)	Average throughput (PCU/hr)	Throughput (exit side) (Veh/hr)	Start queue (Veh)	End queue (Veh)	Delay (s)	Unsignalised level of service
A - Standing Way (E)	1458	365	195	1431	1510	1835	14.5	20.9	45.728	E
B - Whaddon Road	641	160	1186	409	428	440	68.3	122.9	797.983	F
C - Standing Way (W)	1824	456	227	1803	1890	1367	14.0	19.9	33.572	D

08:30 - 08:45

Arm	Total Demand (Veh/hr)	Junction Arrivals (Veh)	Circulating flow (Veh/hr)	Throughput (Veh/hr)	Average throughput (PCU/hr)	Throughput (exit side) (Veh/hr)	Start queue (Veh)	End queue (Veh)	Delay (s)	Unsignalised level of service
A - Standing Way (E)	1182	296	161	1203	1328	1609	20.9	4.3	24.800	C
B - Whaddon Road	528	132	1004	504	480	360	122.9	137.4	893.670	F
C - Standing Way (W)	1471	368	281	1490	1613	1227	19.9	4.1	15.714	C

08:45 - 09:00

Arm	Total Demand (Veh/hr)	Junction Arrivals (Veh)	Circulating flow (Veh/hr)	Throughput (Veh/hr)	Average throughput (PCU/hr)	Throughput (exit side) (Veh/hr)	Start queue (Veh)	End queue (Veh)	Delay (s)	Unsignalised level of service
A - Standing Way (E)	997	249	128	1000	1064	1440	4.3	2.0	7.704	A
B - Whaddon Road	436	109	839	616	601	288	137.4	100.5	635.519	F
C - Standing Way (W)	1234	308	334	1233	1307	1121	4.1	3.1	7.860	A

Lane Results

Lane Level notation: Lane Level 1 is always closest to the junction.

Lanes: Main Results for each time segment

07:30 - 07:45

Arm	Side	Lane level	Lane	Destination arms	Total Demand (Veh/hr)	Capacity (Veh/hr)	RFC	Throughput (Veh/hr)	Average throughput (PCU/hr)	Start queue (Veh)	End queue (Veh)	Delay (s)	Unsignalised level of service
A - Standing Way (E)	Entry	1	1	B	165	1020	0.162	166	170	0.0	0.1	4.145	A
			2	A, C	847	1284	0.660	844	880	0.0	1.9	8.163	A
	Exit	1	1		1364			1364	1402	0.0	0.0	0.000	A
B - Whaddon Road	Entry	1	1	C	190	368	0.516	189	195	0.0	1.1	19.680	C
			2	A, B	240	367	0.651	239	238	0.0	1.9	23.984	C
		2	1	(A, B, C)	434			430	446	0.0	1.0	5.102	A
	Exit	1	1		292			292	304	0.0	0.0	0.000	A
C - Standing Way (W)	Entry	1	1	A	606	970	0.625	608	628	0.0	1.2	6.830	A
			2	A, B, C	640	963	0.664	641	665	0.0	1.4	7.243	A
		2	1	(A, B, C)	1246			1246	1304	0.0	0.0	0.000	A
	Exit	1	1		1030			1030	1072	0.0	0.0	0.000	A

07:45 - 08:00

Arm	Side	Lane level	Lane	Destination arms	Total Demand (Veh/hr)	Capacity (Veh/hr)	RFC	Throughput (Veh/hr)	Average throughput (PCU/hr)	Start queue (Veh)	End queue (Veh)	Delay (s)	Unsignalised level of service
A - Standing Way (E)	Entry	1	1	B	194	1009	0.192	194	199	0.1	0.2	4.343	A
			2	A, C	999	1275	0.783	1000	1049	1.9	4.2	13.443	B
	Exit	1	1		1592			1592	1648	0.0	0.0	0.000	A
B - Whaddon Road	Entry	1	1	C	215	315	0.685	216	221	1.1	1.8	27.736	D
			2	A, B	266	315	0.843	266	269	1.9	3.2	39.361	E
		2	1	(A, B, C)	520			481	499	1.0	9.6	40.724	E
	Exit	1	1		345			345	361	0.0	0.0	0.000	A
C - Standing Way (W)	Entry	1	1	A	727	955	0.761	727	754	1.2	1.9	10.114	B
			2	A, B, C	747	954	0.783	746	783	1.4	2.2	10.699	B
		2	1	(A, B, C)	1475			1474	1543	0.0	0.0	0.028	A
	Exit	1	1		1213			1213	1266	0.0	0.0	0.000	A

08:00 - 08:15

Arm	Side	Lane level	Lane	Destination arms	Total Demand (Veh/hr)	Capacity (Veh/hr)	RFC	Throughput (Veh/hr)	Average throughput (PCU/hr)	Start queue (Veh)	End queue (Veh)	Delay (s)	Unsignalised level of service
A - Standing Way (E)	Entry	1	1	B	239	999	0.240	239	249	0.2	0.3	4.851	A
			2	A, C	1222	1256	0.972	1196	1244	4.2	14.2	31.849	D
	Exit	1	1		1822			1822	1899	0.0	0.0	0.000	A
B - Whaddon Road	Entry	1	1	C	184	248	0.741	185	196	1.8	2.4	42.533	E
			2	A, B	218	249	0.875	215	239	3.2	3.8	57.205	F
		2	1	(A, B, C)	645			402	441	9.6	62.0	304.358	F
	Exit	1	1		432			432	445	0.0	0.0	0.000	A
C - Standing Way (W)	Entry	1	1	A	888	977	0.911	889	914	1.9	5.4	20.098	C
			2	A, B, C	905	974	0.929	908	938	2.2	5.4	20.675	C
		2	1	(A, B, C)	1804			1794	1879	0.0	3.2	3.374	A
	Exit	1	1		1378			1378	1436	0.0	0.0	0.000	A

08:15 - 08:30

Arm	Side	Lane level	Lane	Destination arms	Total Demand (Veh/hr)	Capacity (Veh/hr)	RFC	Throughput (Veh/hr)	Average throughput (PCU/hr)	Start queue (Veh)	End queue (Veh)	Delay (s)	Unsignalised level of service
A - Standing Way (E)	Entry	1	1	B	247	998	0.247	245	254	0.3	0.4	4.875	A
			2	A, C	1212	1258	0.963	1186	1257	14.2	20.4	54.110	F
	Exit	1	1		1835			1835	1924	0.0	0.0	0.000	A
B - Whaddon Road	Entry	1	1	C	183	251	0.729	185	195	2.4	2.2	43.134	E
			2	A, B	225	253	0.891	224	233	3.8	4.0	61.597	F
		2	1	(A, B, C)	641			408	428	62.0	116.7	749.817	F
	Exit	1	1		440			440	457	0.0	0.0	0.000	A
C - Standing Way (W)	Entry	1	1	A	900	972	0.924	893	935	5.4	6.5	22.797	C
			2	A, B, C	912	968	0.943	910	954	5.4	6.5	23.423	C
		2	1	(A, B, C)	1824			1813	1898	3.2	7.0	10.466	B
	Exit	1	1		1367			1367	1447	0.0	0.0	0.000	A

08:30 - 08:45

Arm	Side	Lane level	Lane	Destination arms	Total Demand (Veh/hr)	Capacity (Veh/hr)	RFC	Throughput (Veh/hr)	Average throughput (PCU/hr)	Start queue (Veh)	End queue (Veh)	Delay (s)	Unsignalised level of service
A - Standing Way (E)	Entry	1	1	B	198	1007	0.196	199	206	0.4	0.2	4.326	A
			2	A, C	984	1272	0.774	1004	1122	20.4	4.1	28.924	D
	Exit	1	1		1609			1609	1706	0.0	0.0	0.000	A
B - Whaddon Road	Entry	1	1	C	227	311	0.729	226	215	2.2	2.2	37.588	E
			2	A, B	276	315	0.876	278	265	4.0	3.8	54.195	F
		2	1	(A, B, C)	528			503	479	116.7	131.5	859.315	F
	Exit	1	1		360			360	383	0.0	0.0	0.000	A
C - Standing Way (W)	Entry	1	1	A	722	954	0.756	730	794	6.5	2.0	13.121	B
			2	A, B, C	751	953	0.788	759	819	6.5	2.0	13.626	B
		2	1	(A, B, C)	1471			1473	1576	7.0	0.0	2.679	A
	Exit	1	1		1227			1227	1333	0.0	0.0	0.000	A

08:45 - 09:00

Arm	Side	Lane level	Lane	Destination arms	Total Demand (Veh/hr)	Capacity (Veh/hr)	RFC	Throughput (Veh/hr)	Average throughput (PCU/hr)	Start queue (Veh)	End queue (Veh)	Delay (s)	Unsignalised level of service
A - Standing Way (E)	Entry	1	1	B	160	1020	0.156	161	170	0.2	0.1	4.329	A
			2	A, C	838	1289	0.650	839	893	4.1	1.8	8.380	A
	Exit	1	1		1440			1440	1500	0.0	0.0	0.000	A
B - Whaddon Road	Entry	1	1	C	280	366	0.764	285	274	2.2	2.1	30.209	D
			2	A, B	337	370	0.910	331	327	3.8	4.0	41.670	E
		2	1	(A, B, C)	436			616	601	131.5	94.4	607.492	F
	Exit	1	1		288			288	309	0.0	0.0	0.000	A
C - Standing Way (W)	Entry	1	1	A	601	934	0.643	600	633	2.0	1.4	7.714	A
			2	A, B, C	633	936	0.677	633	674	2.0	1.7	7.996	A
		2	1	(A, B, C)	1234			1234	1303	0.0	0.0	0.002	A
	Exit	1	1		1121			1121	1163	0.0	0.0	0.000	A

2033 Base + CD + D, PM

Data Errors and Warnings

Severity	Area	Item	Description
Warning	Lane Simulation	A1 - [Lane Simulation]	This analysis set uses Lane Simulation mode. This is provided as an investigative tool and the user should apply judgement when interpreting the results.
Last Run	Lane Simulation	B - Whaddon Road - Lane Simulation	Arm B: Queue at end of modelled period is greater than 10 PCU. Delay is likely to have been underestimated.
Warning	Geometry	C - Standing Way (W) - Roundabout Geometry	Effective flare length is over 30m, which is outside the normal range. Treat capacities with increasing caution.

Junction Network

Junctions

Junction	Name	Junction type	Use circulating lanes	Arm order	Junction Delay (s)	Junction LOS
J6	Bottledump Roundabout	Standard Roundabout		A, B, C	133.41	F

Junction Network Options

Driving side	Lighting
Left	Normal/unknown

Traffic Demand

Demand Set Details

ID	Scenario name	Time Period name	Traffic profile type	Start time (HH:mm)	Finish time (HH:mm)	Time segment length (min)	Run automatically
D16	2033 Base + CD + D	PM	ONE HOUR	16:45	18:15	15	✓

Vehicle mix varies over turn	Vehicle mix varies over entry	Vehicle mix source	PCU Factor for a HV (PCU)
✓	✓	HV Percentages	2.00

Demand overview (Traffic)

Arm	Linked arm	Profile type	Use O-D data	Average Demand (Veh/hr)	Scaling Factor (%)
A - Standing Way (E)		ONE HOUR	✓	1510	100.000
B - Whaddon Road		ONE HOUR	✓	441	100.000
C - Standing Way (W)		ONE HOUR	✓	1508	100.000

Origin-Destination Data

Demand (Veh/hr)

		To		
		A - Standing Way (E)	B - Whaddon Road	C - Standing Way (W)
From	A - Standing Way (E)	2	230	1278
	B - Whaddon Road	249	0	193
	C - Standing Way (W)	1265	243	0

Proportions

		To		
		A - Standing Way (E)	B - Whaddon Road	C - Standing Way (W)
From	A - Standing Way (E)	0.00	0.15	0.85
	B - Whaddon Road	0.56	0.00	0.44
	C - Standing Way (W)	0.84	0.16	0.00

Vehicle Mix

Heavy Vehicle Percentages

		To		
		A - Standing Way (E)	B - Whaddon Road	C - Standing Way (W)
From	A - Standing Way (E)	50	1	2
	B - Whaddon Road	0	0	3
	C - Standing Way (W)	3	2	0

Average PCU Per Veh

		To		
		A - Standing Way (E)	B - Whaddon Road	C - Standing Way (W)
From	A - Standing Way (E)	1.500	1.010	1.018
	B - Whaddon Road	1.000	1.000	1.031
	C - Standing Way (W)	1.025	1.019	1.000

Detailed Demand Data

Demand for each time segment

Arm	Time Segment	Demand (Veh/hr)	Demand in PCU (PCU/hr)
A - Standing Way (E)	16:45-17:00	1137	1157
	17:00-17:15	1358	1382
	17:15-17:30	1663	1692
	17:30-17:45	1663	1692
	17:45-18:00	1358	1382
	18:00-18:15	1137	1157
B - Whaddon Road	16:45-17:00	332	337
	17:00-17:15	397	402
	17:15-17:30	486	493
	17:30-17:45	486	493
	17:45-18:00	397	402
	18:00-18:15	332	337
C - Standing Way (W)	16:45-17:00	1135	1163
	17:00-17:15	1356	1388
	17:15-17:30	1660	1700
	17:30-17:45	1660	1700
	17:45-18:00	1356	1388
	18:00-18:15	1135	1163

Results

Results Summary for whole modelled period

Arm	Max Delay (s)	Max Queue (Veh)	Max LOS	Average Demand (Veh/hr)	Total Junction Arrivals (Veh)
A - Standing Way (E)	147.05	76.6	F	1389	2084
B - Whaddon Road	497.64	56.2	F	406	609
C - Standing Way (W)	14.33	7.4	B	1387	2081

Main Results for each time segment

16:45 - 17:00

Arm	Total Demand (Veh/hr)	Junction Arrivals (Veh)	Circulating flow (Veh/hr)	Throughput (Veh/hr)	Average throughput (PCU/hr)	Throughput (exit side) (Veh/hr)	Start queue (Veh)	End queue (Veh)	Delay (s)	Unsignalised level of service
A - Standing Way (E)	1150	287	187	1150	1148	1132	0.0	2.9	9.034	A
B - Whaddon Road	334	83	972	333	331	365	0.0	2.1	20.903	C
C - Standing Way (W)	1129	282	189	1130	1154	1116	0.0	1.8	6.065	A

17:00 - 17:15

Arm	Total Demand (Veh/hr)	Junction Arrivals (Veh)	Circulating flow (Veh/hr)	Throughput (Veh/hr)	Average throughput (PCU/hr)	Throughput (exit side) (Veh/hr)	Start queue (Veh)	End queue (Veh)	Delay (s)	Unsignalised level of service
A - Standing Way (E)	1353	338	222	1349	1353	1365	2.9	7.5	17.034	C
B - Whaddon Road	396	99	1139	381	386	431	2.1	6.8	47.807	E
C - Standing Way (W)	1361	340	216	1370	1395	1305	1.8	2.5	7.628	A

17:15 - 17:30

Arm	Total Demand (Veh/hr)	Junction Arrivals (Veh)	Circulating flow (Veh/hr)	Throughput (Veh/hr)	Average throughput (PCU/hr)	Throughput (exit side) (Veh/hr)	Start queue (Veh)	End queue (Veh)	Delay (s)	Unsignalised level of service
A - Standing Way (E)	1654	413	268	1529	1542	1604	7.5	41.9	62.195	F
B - Whaddon Road	477	119	1276	389	405	520	6.8	27.7	159.620	F
C - Standing Way (W)	1652	413	223	1648	1675	1442	2.5	5.7	12.198	B

17:30 - 17:45

Arm	Total Demand (Veh/hr)	Junction Arrivals (Veh)	Circulating flow (Veh/hr)	Throughput (Veh/hr)	Average throughput (PCU/hr)	Throughput (exit side) (Veh/hr)	Start queue (Veh)	End queue (Veh)	Delay (s)	Unsignalised level of service
A - Standing Way (E)	1667	417	269	1539	1563	1636	41.9	76.6	143.730	F
B - Whaddon Road	484	121	1284	392	393	525	27.7	52.6	384.992	F
C - Standing Way (W)	1681	420	225	1680	1711	1451	5.7	7.3	14.333	B

17:45 - 18:00

Arm	Total Demand (Veh/hr)	Junction Arrivals (Veh)	Circulating flow (Veh/hr)	Throughput (Veh/hr)	Average throughput (PCU/hr)	Throughput (exit side) (Veh/hr)	Start queue (Veh)	End queue (Veh)	Delay (s)	Unsignalised level of service
A - Standing Way (E)	1373	343	219	1482	1513	1363	76.6	46.7	147.055	F
B - Whaddon Road	410	102	1273	381	397	428	52.6	56.1	497.644	F
C - Standing Way (W)	1363	341	218	1364	1414	1436	7.3	2.6	8.264	A

18:00 - 18:15

Arm	Total Demand (Veh/hr)	Junction Arrivals (Veh)	Circulating flow (Veh/hr)	Throughput (Veh/hr)	Average throughput (PCU/hr)	Throughput (exit side) (Veh/hr)	Start queue (Veh)	End queue (Veh)	Delay (s)	Unsignalised level of service
A - Standing Way (E)	1139	285	185	1222	1328	1221	46.7	6.9	54.734	F
B - Whaddon Road	336	84	1046	472	443	361	56.1	31.2	321.582	F
C - Standing Way (W)	1137	284	269	1137	1168	1248	2.6	2.1	6.189	A

Lane Results

Lane Level notation: Lane Level 1 is always closest to the junction.

Lanes: Main Results for each time segment

16:45 - 17:00

Arm	Side	Lane level	Lane	Destination arms	Total Demand (Veh/hr)	Capacity (Veh/hr)	RFC	Throughput (Veh/hr)	Average throughput (PCU/hr)	Start queue (Veh)	End queue (Veh)	Delay (s)	Unsignalised level of service
A - Standing Way (E)	Entry	1	1	B	178	1015	0.175	178	175	0.0	0.2	4.204	A
			2	A, C	972	1315	0.740	972	972	0.0	2.8	9.906	A
	Exit	1	1		1132			1132	1157	0.0	0.0	0.000	A
B - Whaddon Road	Entry	1	1	C	148	336	0.439	147	144	0.0	0.8	17.746	C
			2	A, B	187	345	0.542	186	187	0.0	1.1	20.656	C
		2	1	(A, B, C)	334			334	339	0.0	0.1	1.451	A
	Exit	1	1		365			365	362	0.0	0.0	0.000	A
C - Standing Way (W)	Entry	1	1	A	528	1001	0.527	527	540	0.0	0.8	5.781	A
			2	A, B, C	601	1004	0.599	603	614	0.0	1.0	6.313	A
		2	1	(A, B, C)	1129			1129	1162	0.0	0.0	0.000	A
	Exit	1	1		1116			1116	1113	0.0	0.0	0.000	A

17:00 - 17:15

Arm	Side	Lane level	Lane	Destination arms	Total Demand (Veh/hr)	Capacity (Veh/hr)	RFC	Throughput (Veh/hr)	Average throughput (PCU/hr)	Start queue (Veh)	End queue (Veh)	Delay (s)	Unsignalised level of service
A - Standing Way (E)	Entry	1	1	B	209	1003	0.208	210	209	0.2	0.3	4.529	A
			2	A, C	1145	1299	0.881	1139	1144	2.8	7.2	19.307	C
	Exit	1	1		1365			1365	1386	0.0	0.0	0.000	A
B - Whaddon Road	Entry	1	1	C	168	282	0.598	167	173	0.8	1.4	27.490	D
			2	A, B	216	290	0.746	214	213	1.1	2.4	35.540	E
		2	1	(A, B, C)	396			384	394	0.1	3.0	15.259	C
	Exit	1	1		431			431	434	0.0	0.0	0.000	A
C - Standing Way (W)	Entry	1	1	A	641	991	0.646	646	663	0.8	1.1	7.363	A
			2	A, B, C	721	996	0.723	724	733	1.0	1.4	7.867	A
		2	1	(A, B, C)	1361			1361	1398	0.0	0.0	0.000	A
	Exit	1	1		1305			1305	1314	0.0	0.0	0.000	A

17:15 - 17:30

Arm	Side	Lane level	Lane	Destination arms	Total Demand (Veh/hr)	Capacity (Veh/hr)	RFC	Throughput (Veh/hr)	Average throughput (PCU/hr)	Start queue (Veh)	End queue (Veh)	Delay (s)	Unsignalised level of service
A - Standing Way (E)	Entry	1	1	B	253	991	0.255	252	256	0.3	0.4	4.930	A
			2	A, C	1401	1281	1.094	1276	1286	7.2	41.5	72.566	F
	Exit	1	1		1604			1604	1631	0.0	0.0	0.000	A
B - Whaddon Road	Entry	1	1	C	172	236	0.724	168	181	1.4	2.2	39.194	E
			2	A, B	221	244	0.905	221	224	2.4	3.9	55.869	F
		2	1	(A, B, C)	477			393	414	3.0	21.6	109.576	F
	Exit	1	1		520			520	528	0.0	0.0	0.000	A
C - Standing Way (W)	Entry	1	1	A	800	992	0.806	799	815	1.1	2.7	11.670	B
			2	A, B, C	851	993	0.857	850	861	1.4	3.0	12.560	B
		2	1	(A, B, C)	1652			1651	1688	0.0	0.1	0.060	A
	Exit	1	1		1442			1442	1464	0.0	0.0	0.000	A

17:30 - 17:45

Arm	Side	Lane level	Lane	Destination arms	Total Demand (Veh/hr)	Capacity (Veh/hr)	RFC	Throughput (Veh/hr)	Average throughput (PCU/hr)	Start queue (Veh)	End queue (Veh)	Delay (s)	Unsignalised level of service
A - Standing Way (E)	Entry	1	1	B	254	989	0.257	255	259	0.4	0.3	5.113	A
			2	A, C	1413	1281	1.101	1284	1304	41.5	76.3	168.758	F
	Exit	1	1		1636			1636	1663	0.0	0.0	0.000	A
B - Whaddon Road	Entry	1	1	C	167	235	0.712	170	174	2.2	2.0	44.808	E
			2	A, B	224	243	0.924	223	220	3.9	4.1	65.373	F
		2	1	(A, B, C)	484			392	393	21.6	46.5	328.764	F
	Exit	1	1		525			525	530	0.0	0.0	0.000	A
C - Standing Way (W)	Entry	1	1	A	822	990	0.831	820	836	2.7	3.3	13.455	B
			2	A, B, C	859	992	0.867	860	876	3.0	3.7	14.379	B
		2	1	(A, B, C)	1681			1682	1718	0.1	0.2	0.412	A
	Exit	1	1		1451			1451	1475	0.0	0.0	0.000	A

17:45 - 18:00

Arm	Side	Lane level	Lane	Destination arms	Total Demand (Veh/hr)	Capacity (Veh/hr)	RFC	Throughput (Veh/hr)	Average throughput (PCU/hr)	Start queue (Veh)	End queue (Veh)	Delay (s)	Unsignalised level of service
A - Standing Way (E)	Entry	1	1	B	209	1002	0.209	209	210	0.3	0.3	4.514	A
			2	A, C	1163	1300	0.894	1273	1303	76.3	46.3	172.619	F
	Exit	1	1		1363			1363	1413	0.0	0.0	0.000	A
B - Whaddon Road	Entry	1	1	C	168	238	0.706	165	175	2.0	2.2	44.788	E
			2	A, B	213	246	0.865	216	222	4.1	3.8	65.173	F
		2	1	(A, B, C)	410			381	397	46.5	50.1	443.708	F
	Exit	1	1		428			428	437	0.0	0.0	0.000	A
C - Standing Way (W)	Entry	1	1	A	646	992	0.651	646	672	3.3	1.2	7.982	A
			2	A, B, C	717	993	0.723	718	742	3.7	1.4	8.494	A
		2	1	(A, B, C)	1363			1363	1395	0.2	0.0	0.019	A
	Exit	1	1		1436			1436	1474	0.0	0.0	0.000	A

18:00 - 18:15

Arm	Side	Lane level	Lane	Destination arms	Total Demand (Veh/hr)	Capacity (Veh/hr)	RFC	Throughput (Veh/hr)	Average throughput (PCU/hr)	Start queue (Veh)	End queue (Veh)	Delay (s)	Unsignalised level of service
A - Standing Way (E)	Entry	1	1	B	176	1012	0.174	176	179	0.3	0.3	4.287	A
			2	A, C	963	1314	0.734	1046	1149	46.3	6.6	64.084	F
	Exit	1	1		1221			1221	1232	0.0	0.0	0.000	A
B - Whaddon Road	Entry	1	1	C	201	311	0.646	203	196	2.2	1.7	37.204	E
			2	A, B	263	320	0.821	268	247	3.8	3.3	54.705	F
		2	1	(A, B, C)	336			464	439	50.1	26.1	279.919	F
	Exit	1	1		361			361	366	0.0	0.0	0.000	A
C - Standing Way (W)	Entry	1	1	A	530	976	0.543	530	550	1.2	1.0	5.850	A
			2	A, B, C	607	978	0.620	607	619	1.4	1.2	6.490	A
		2	1	(A, B, C)	1137			1137	1167	0.0	0.0	0.000	A
	Exit	1	1		1248			1248	1342	0.0	0.0	0.000	A

2033 Base + CD + D with TP, AM

Data Errors and Warnings

Severity	Area	Item	Description
Warning	Lane Simulation	A1 - [Lane Simulation]	This analysis set uses Lane Simulation mode. This is provided as an investigative tool and the user should apply judgement when interpreting the results.
Last Run	Lane Simulation	B - Whaddon Road - Lane Simulation	Arm B: Queue at end of modelled period is greater than 10 PCU. Delay is likely to have been underestimated.
Warning	Geometry	C - Standing Way (W) - Roundabout Geometry	Effective flare length is over 30m, which is outside the normal range. Treat capacities with increasing caution.

Junction Network

Junctions

Junction	Name	Junction type	Use circulating lanes	Arm order	Junction Delay (s)	Junction LOS
J6	Bottledump Roundabout	Standard Roundabout		A, B, C	144.98	F

Junction Network Options

Driving side	Lighting
Left	Normal/unknown

Traffic Demand

Demand Set Details

ID	Scenario name	Time Period name	Traffic profile type	Start time (HH:mm)	Finish time (HH:mm)	Time segment length (min)	Run automatically
D17	2033 Base + CD + D with TP	AM	ONE HOUR	07:30	09:00	15	✓

Vehicle mix varies over turn	Vehicle mix varies over entry	Vehicle mix source	PCU Factor for a HV (PCU)
✓	✓	HV Percentages	2.00

Demand overview (Traffic)

Arm	Linked arm	Profile type	Use O-D data	Average Demand (Veh/hr)	Scaling Factor (%)
A - Standing Way (E)		ONE HOUR	✓	1327	100.000
B - Whaddon Road		ONE HOUR	✓	557	100.000
C - Standing Way (W)		ONE HOUR	✓	1646	100.000

Origin-Destination Data

Demand (Veh/hr)

		To		
		A - Standing Way (E)	B - Whaddon Road	C - Standing Way (W)
From	A - Standing Way (E)	3	223	1100
	B - Whaddon Road	303	0	254
	C - Standing Way (W)	1479	166	0

Proportions

		To		
		A - Standing Way (E)	B - Whaddon Road	C - Standing Way (W)
From	A - Standing Way (E)	0.00	0.17	0.83
	B - Whaddon Road	0.54	0.00	0.46
	C - Standing Way (W)	0.90	0.10	0.00

Vehicle Mix

Heavy Vehicle Percentages

		To		
		A - Standing Way (E)	B - Whaddon Road	C - Standing Way (W)
From	A - Standing Way (E)	33	2	6
	B - Whaddon Road	2	0	3
	C - Standing Way (W)	4	6	0

Average PCU Per Veh

		To		
		A - Standing Way (E)	B - Whaddon Road	C - Standing Way (W)
From	A - Standing Way (E)	1.333	1.022	1.057
	B - Whaddon Road	1.022	1.000	1.026
	C - Standing Way (W)	1.042	1.056	1.000

Detailed Demand Data

Demand for each time segment

Arm	Time Segment	Demand (Veh/hr)	Demand in PCU (PCU/hr)
A - Standing Way (E)	07:30-07:45	999	1051
	07:45-08:00	1193	1255
	08:00-08:15	1461	1537
	08:15-08:30	1461	1537
	08:30-08:45	1193	1255
	08:45-09:00	999	1051
B - Whaddon Road	07:30-07:45	419	429
	07:45-08:00	500	512
	08:00-08:15	613	628
	08:15-08:30	613	628
	08:30-08:45	500	512
	08:45-09:00	419	429
C - Standing Way (W)	07:30-07:45	1239	1293
	07:45-08:00	1480	1544
	08:00-08:15	1812	1891
	08:15-08:30	1812	1891
	08:30-08:45	1480	1544
	08:45-09:00	1239	1293

Results

Results Summary for whole modelled period

Arm	Max Delay (s)	Max Queue (Veh)	Max LOS	Average Demand (Veh/hr)	Total Junction Arrivals (Veh)
A - Standing Way (E)	43.99	19.2	E	1218	1827
B - Whaddon Road	745.87	108.5	F	509	764
C - Standing Way (W)	27.22	13.4	D	1499	2248

Main Results for each time segment

07:30 - 07:45

Arm	Total Demand (Veh/hr)	Junction Arrivals (Veh)	Circulating flow (Veh/hr)	Throughput (Veh/hr)	Average throughput (PCU/hr)	Throughput (exit side) (Veh/hr)	Start queue (Veh)	End queue (Veh)	Delay (s)	Unsignalised level of service
A - Standing Way (E)	988	247	124	989	1041	1332	0.0	2.0	7.711	A
B - Whaddon Road	421	105	822	420	423	291	0.0	3.1	25.410	D
C - Standing Way (W)	1227	307	230	1225	1281	1011	0.0	2.4	6.852	A

07:45 - 08:00

Arm	Total Demand (Veh/hr)	Junction Arrivals (Veh)	Circulating flow (Veh/hr)	Throughput (Veh/hr)	Average throughput (PCU/hr)	Throughput (exit side) (Veh/hr)	Start queue (Veh)	End queue (Veh)	Delay (s)	Unsignalised level of service
A - Standing Way (E)	1195	299	146	1190	1243	1589	2.0	4.3	11.102	B
B - Whaddon Road	492	123	990	482	479	346	3.1	11.5	62.931	F
C - Standing Way (W)	1464	366	270	1465	1549	1203	2.4	4.4	10.127	B

08:00 - 08:15

Arm	Total Demand (Veh/hr)	Junction Arrivals (Veh)	Circulating flow (Veh/hr)	Throughput (Veh/hr)	Average throughput (PCU/hr)	Throughput (exit side) (Veh/hr)	Start queue (Veh)	End queue (Veh)	Delay (s)	Unsignalised level of service
A - Standing Way (E)	1474	369	182	1435	1492	1843	4.3	15.5	27.593	D
B - Whaddon Road	610	152	1190	433	451	427	11.5	55.4	279.519	F
C - Standing Way (W)	1808	452	237	1789	1846	1386	4.4	12.8	21.809	C

08:15 - 08:30

Arm	Total Demand (Veh/hr)	Junction Arrivals (Veh)	Circulating flow (Veh/hr)	Throughput (Veh/hr)	Average throughput (PCU/hr)	Throughput (exit side) (Veh/hr)	Start queue (Veh)	End queue (Veh)	Delay (s)	Unsignalised level of service
A - Standing Way (E)	1456	364	178	1440	1519	1841	15.5	19.1	43.993	E
B - Whaddon Road	614	153	1202	396	422	417	55.4	104.3	679.882	F
C - Standing Way (W)	1791	448	221	1799	1879	1376	12.8	13.3	27.217	D

08:30 - 08:45

Arm	Total Demand (Veh/hr)	Junction Arrivals (Veh)	Circulating flow (Veh/hr)	Throughput (Veh/hr)	Average throughput (PCU/hr)	Throughput (exit side) (Veh/hr)	Start queue (Veh)	End queue (Veh)	Delay (s)	Unsignalised level of service
A - Standing Way (E)	1207	302	151	1204	1326	1606	19.1	5.0	22.459	C
B - Whaddon Road	507	127	999	526	494	356	104.3	108.6	745.870	F
C - Standing Way (W)	1468	367	287	1470	1578	1238	13.3	4.3	12.793	B

08:45 - 09:00

Arm	Total Demand (Veh/hr)	Junction Arrivals (Veh)	Circulating flow (Veh/hr)	Throughput (Veh/hr)	Average throughput (PCU/hr)	Throughput (exit side) (Veh/hr)	Start queue (Veh)	End queue (Veh)	Delay (s)	Unsignalised level of service
A - Standing Way (E)	988	247	123	993	1063	1440	5.0	1.7	7.853	A
B - Whaddon Road	414	103	827	613	600	289	108.6	65.6	472.821	F
C - Standing Way (W)	1231	308	328	1235	1304	1113	4.3	2.4	7.445	A

Lane Results

Lane Level notation: Lane Level 1 is always closest to the junction.

Lanes: Main Results for each time segment

07:30 - 07:45

Arm	Side	Lane level	Lane	Destination arms	Total Demand (Veh/hr)	Capacity (Veh/hr)	RFC	Throughput (Veh/hr)	Average throughput (PCU/hr)	Start queue (Veh)	End queue (Veh)	Delay (s)	Unsignalised level of service
A - Standing Way (E)	Entry	1	1	B	168	1016	0.166	167	173	0.0	0.2	4.223	A
			2	A, C	820	1294	0.635	822	868	0.0	1.8	8.428	A
	Exit	1	1		1332			1332	1386	0.0	0.0	0.000	A
B - Whaddon Road	Entry	1	1	C	195	375	0.520	193	193	0.0	1.2	18.597	C
			2	A, B	228	378	0.604	227	230	0.0	1.4	22.508	C
		2	1	(A, B, C)	421			423	434	0.0	0.5	4.613	A
	Exit	1	1		291			291	303	0.0	0.0	0.000	A
C - Standing Way (W)	Entry	1	1	A	600	972	0.617	598	621	0.0	1.2	6.616	A
			2	A, B, C	627	969	0.648	627	660	0.0	1.2	7.076	A
		2	1	(A, B, C)	1227			1227	1291	0.0	0.0	0.000	A
	Exit	1	1		1011			1011	1057	0.0	0.0	0.000	A

07:45 - 08:00

Arm	Side	Lane level	Lane	Destination arms	Total Demand (Veh/hr)	Capacity (Veh/hr)	RFC	Throughput (Veh/hr)	Average throughput (PCU/hr)	Start queue (Veh)	End queue (Veh)	Delay (s)	Unsignalised level of service
A - Standing Way (E)	Entry	1	1	B	199	1014	0.197	200	202	0.2	0.2	4.293	A
			2	A, C	995	1286	0.774	990	1041	1.8	4.1	12.462	B
	Exit	1	1		1589			1589	1655	0.0	0.0	0.000	A
B - Whaddon Road	Entry	1	1	C	213	321	0.663	215	217	1.2	1.8	27.942	D
			2	A, B	270	321	0.842	267	262	1.4	2.9	35.874	E
		2	1	(A, B, C)	492			483	488	0.5	6.8	30.181	D
	Exit	1	1		346			346	362	0.0	0.0	0.000	A
C - Standing Way (W)	Entry	1	1	A	716	958	0.747	715	758	1.2	2.1	9.932	A
			2	A, B, C	749	952	0.786	750	791	1.2	2.3	10.303	B
		2	1	(A, B, C)	1464			1464	1558	0.0	0.0	0.005	A
	Exit	1	1		1203			1203	1253	0.0	0.0	0.000	A

08:00 - 08:15

Arm	Side	Lane level	Lane	Destination arms	Total Demand (Veh/hr)	Capacity (Veh/hr)	RFC	Throughput (Veh/hr)	Average throughput (PCU/hr)	Start queue (Veh)	End queue (Veh)	Delay (s)	Unsignalised level of service
A - Standing Way (E)	Entry	1	1	B	244	1007	0.243	245	251	0.2	0.3	4.650	A
			2	A, C	1230	1268	0.970	1190	1241	4.1	15.2	32.220	D
	Exit	1	1		1843			1843	1904	0.0	0.0	0.000	A
B - Whaddon Road	Entry	1	1	C	198	253	0.784	200	208	1.8	2.3	39.936	E
			2	A, B	235	254	0.926	233	243	2.9	3.9	55.280	F
		2	1	(A, B, C)	610			434	457	6.8	49.2	229.276	F
	Exit	1	1		427			427	441	0.0	0.0	0.000	A
C - Standing Way (W)	Entry	1	1	A	887	966	0.918	879	916	2.1	5.3	19.066	C
			2	A, B, C	917	967	0.950	910	930	2.3	5.4	19.751	C
		2	1	(A, B, C)	1808			1805	1873	0.0	2.1	2.355	A
	Exit	1	1		1386			1386	1443	0.0	0.0	0.000	A

08:15 - 08:30

Arm	Side	Lane level	Lane	Destination arms	Total Demand (Veh/hr)	Capacity (Veh/hr)	RFC	Throughput (Veh/hr)	Average throughput (PCU/hr)	Start queue (Veh)	End queue (Veh)	Delay (s)	Unsignalised level of service
A - Standing Way (E)	Entry	1	1	B	239	1001	0.239	239	250	0.3	0.4	4.839	A
			2	A, C	1217	1269	0.958	1202	1270	15.2	18.7	51.849	F
	Exit	1	1		1841			1841	1927	0.0	0.0	0.000	A
B - Whaddon Road	Entry	1	1	C	178	247	0.722	179	193	2.3	2.2	44.118	E
			2	A, B	216	248	0.868	217	230	3.9	3.7	62.584	F
		2	1	(A, B, C)	614			394	421	49.2	98.3	630.743	F
	Exit	1	1		417			417	437	0.0	0.0	0.000	A
C - Standing Way (W)	Entry	1	1	A	879	972	0.904	886	931	5.3	4.9	21.475	C
			2	A, B, C	904	974	0.929	912	948	5.4	5.2	22.045	C
		2	1	(A, B, C)	1791			1783	1877	2.1	3.2	5.448	A
	Exit	1	1		1376			1376	1457	0.0	0.0	0.000	A

08:30 - 08:45

Arm	Side	Lane level	Lane	Destination arms	Total Demand (Veh/hr)	Capacity (Veh/hr)	RFC	Throughput (Veh/hr)	Average throughput (PCU/hr)	Start queue (Veh)	End queue (Veh)	Delay (s)	Unsignalised level of service
A - Standing Way (E)	Entry	1	1	B	205	1005	0.204	205	210	0.4	0.3	4.538	A
			2	A, C	1001	1278	0.784	999	1116	18.7	4.7	26.137	D
	Exit	1	1		1606			1606	1689	0.0	0.0	0.000	A
B - Whaddon Road	Entry	1	1	C	241	314	0.768	242	224	2.2	2.4	37.323	E
			2	A, B	283	317	0.894	284	270	3.7	3.8	52.266	F
		2	1	(A, B, C)	507			524	495	98.3	102.3	708.584	F
	Exit	1	1		356			356	372	0.0	0.0	0.000	A
C - Standing Way (W)	Entry	1	1	A	729	953	0.766	729	776	4.9	2.1	11.427	B
			2	A, B, C	739	949	0.778	741	802	5.2	2.2	11.984	B
		2	1	(A, B, C)	1468			1469	1553	3.2	0.0	1.217	A
	Exit	1	1		1238			1238	1336	0.0	0.0	0.000	A

08:45 - 09:00

Arm	Side	Lane level	Lane	Destination arms	Total Demand (Veh/hr)	Capacity (Veh/hr)	RFC	Throughput (Veh/hr)	Average throughput (PCU/hr)	Start queue (Veh)	End queue (Veh)	Delay (s)	Unsignalised level of service
A - Standing Way (E)	Entry	1	1	B	166	1020	0.162	166	171	0.3	0.1	4.325	A
			2	A, C	823	1287	0.638	827	892	4.7	1.5	8.564	A
	Exit	1	1		1440			1440	1497	0.0	0.0	0.000	A
B - Whaddon Road	Entry	1	1	C	283	372	0.760	288	278	2.4	2.1	31.318	D
			2	A, B	332	375	0.887	326	322	3.8	3.8	40.223	E
		2	1	(A, B, C)	414			615	599	102.3	59.7	439.843	F
	Exit	1	1		289			289	303	0.0	0.0	0.000	A
C - Standing Way (W)	Entry	1	1	A	599	941	0.636	600	628	2.1	1.2	7.290	A
			2	A, B, C	632	930	0.680	635	676	2.2	1.2	7.591	A
		2	1	(A, B, C)	1231			1231	1295	0.0	0.0	0.000	A
	Exit	1	1		1113			1113	1166	0.0	0.0	0.000	A

2033 Base + CD + D with TP, PM

Data Errors and Warnings

Severity	Area	Item	Description
Warning	Lane Simulation	A1 - [Lane Simulation]	This analysis set uses Lane Simulation mode. This is provided as an investigative tool and the user should apply judgement when interpreting the results.
Last Run	Lane Simulation	B - Whaddon Road - Lane Simulation	Arm B: Queue at end of modelled period is greater than 10 PCU. Delay is likely to have been underestimated.
Warning	Geometry	C - Standing Way (W) - Roundabout Geometry	Effective flare length is over 30m, which is outside the normal range. Treat capacities with increasing caution.

Junction Network

Junctions

Junction	Name	Junction type	Use circulating lanes	Arm order	Junction Delay (s)	Junction LOS
J6	Bottledump Roundabout	Standard Roundabout		A, B, C	113.83	F

Junction Network Options

Driving side	Lighting
Left	Normal/unknown

Traffic Demand

Demand Set Details

ID	Scenario name	Time Period name	Traffic profile type	Start time (HH:mm)	Finish time (HH:mm)	Time segment length (min)	Run automatically
D18	2033 Base + CD + D with TP	PM	ONE HOUR	16:45	18:15	15	✓

Vehicle mix varies over turn	Vehicle mix varies over entry	Vehicle mix source	PCU Factor for a HV (PCU)
✓	✓	HV Percentages	2.00

Demand overview (Traffic)

Arm	Linked arm	Profile type	Use O-D data	Average Demand (Veh/hr)	Scaling Factor (%)
A - Standing Way (E)		ONE HOUR	✓	1509	100.000
B - Whaddon Road		ONE HOUR	✓	423	100.000
C - Standing Way (W)		ONE HOUR	✓	1495	100.000

Origin-Destination Data

Demand (Veh/hr)

		To		
		A - Standing Way (E)	B - Whaddon Road	C - Standing Way (W)
From	A - Standing Way (E)	2	230	1276
	B - Whaddon Road	239	0	185
	C - Standing Way (W)	1262	233	0

Proportions

		To		
		A - Standing Way (E)	B - Whaddon Road	C - Standing Way (W)
From	A - Standing Way (E)	0.00	0.15	0.85
	B - Whaddon Road	0.56	0.00	0.44
	C - Standing Way (W)	0.84	0.16	0.00

Vehicle Mix

Heavy Vehicle Percentages

		To		
		A - Standing Way (E)	B - Whaddon Road	C - Standing Way (W)
From	A - Standing Way (E)	50	1	2
	B - Whaddon Road	0	0	3
	C - Standing Way (W)	3	2	0

Average PCU Per Veh

		To		
		A - Standing Way (E)	B - Whaddon Road	C - Standing Way (W)
From	A - Standing Way (E)	1.500	1.010	1.018
	B - Whaddon Road	1.000	1.000	1.031
	C - Standing Way (W)	1.025	1.019	1.000

Detailed Demand Data

Demand for each time segment

Arm	Time Segment	Demand (Veh/hr)	Demand in PCU (PCU/hr)
A - Standing Way (E)	16:45-17:00	1136	1156
	17:00-17:15	1356	1381
	17:15-17:30	1661	1691
	17:30-17:45	1661	1691
	17:45-18:00	1356	1381
	18:00-18:15	1136	1156
B - Whaddon Road	16:45-17:00	319	323
	17:00-17:15	380	386
	17:15-17:30	466	472
	17:30-17:45	466	472
	17:45-18:00	380	386
	18:00-18:15	319	323
C - Standing Way (W)	16:45-17:00	1126	1153
	17:00-17:15	1344	1377
	17:15-17:30	1647	1687
	17:30-17:45	1647	1687
	17:45-18:00	1344	1377
	18:00-18:15	1126	1153

Results

Results Summary for whole modelled period

Arm	Max Delay (s)	Max Queue (Veh)	Max LOS	Average Demand (Veh/hr)	Total Junction Arrivals (Veh)
A - Standing Way (E)	139.98	73.0	F	1378	2066
B - Whaddon Road	379.78	42.4	F	389	583
C - Standing Way (W)	13.11	6.0	B	1371	2057

Main Results for each time segment

16:45 - 17:00

Arm	Total Demand (Veh/hr)	Junction Arrivals (Veh)	Circulating flow (Veh/hr)	Throughput (Veh/hr)	Average throughput (PCU/hr)	Throughput (exit side) (Veh/hr)	Start queue (Veh)	End queue (Veh)	Delay (s)	Unsignalised level of service
A - Standing Way (E)	1126	282	178	1127	1138	1132	0.0	2.8	9.076	A
B - Whaddon Road	323	81	957	321	320	348	0.0	2.0	20.009	C
C - Standing Way (W)	1128	282	180	1129	1149	1098	0.0	1.8	5.830	A

17:00 - 17:15

Arm	Total Demand (Veh/hr)	Junction Arrivals (Veh)	Circulating flow (Veh/hr)	Throughput (Veh/hr)	Average throughput (PCU/hr)	Throughput (exit side) (Veh/hr)	Start queue (Veh)	End queue (Veh)	Delay (s)	Unsignalised level of service
A - Standing Way (E)	1352	338	208	1351	1362	1358	2.8	7.1	17.534	C
B - Whaddon Road	382	95	1148	376	374	411	2.0	5.2	39.994	E
C - Standing Way (W)	1348	337	216	1350	1377	1308	1.8	2.8	7.438	A

17:15 - 17:30

Arm	Total Demand (Veh/hr)	Junction Arrivals (Veh)	Circulating flow (Veh/hr)	Throughput (Veh/hr)	Average throughput (PCU/hr)	Throughput (exit side) (Veh/hr)	Start queue (Veh)	End queue (Veh)	Delay (s)	Unsignalised level of service
A - Standing Way (E)	1653	413	253	1523	1539	1609	7.1	43.1	64.750	F
B - Whaddon Road	465	116	1273	390	396	503	5.2	23.4	139.384	F
C - Standing Way (W)	1643	411	221	1640	1671	1441	2.8	5.9	12.230	B

17:30 - 17:45

Arm	Total Demand (Veh/hr)	Junction Arrivals (Veh)	Circulating flow (Veh/hr)	Throughput (Veh/hr)	Average throughput (PCU/hr)	Throughput (exit side) (Veh/hr)	Start queue (Veh)	End queue (Veh)	Delay (s)	Unsignalised level of service
A - Standing Way (E)	1652	413	256	1545	1565	1607	43.1	72.7	139.980	F
B - Whaddon Road	466	117	1290	390	396	511	23.4	42.4	311.767	F
C - Standing Way (W)	1640	410	224	1639	1686	1456	5.9	5.8	13.112	B

17:45 - 18:00

Arm	Total Demand (Veh/hr)	Junction Arrivals (Veh)	Circulating flow (Veh/hr)	Throughput (Veh/hr)	Average throughput (PCU/hr)	Throughput (exit side) (Veh/hr)	Start queue (Veh)	End queue (Veh)	Delay (s)	Unsignalised level of service
A - Standing Way (E)	1351	338	210	1472	1515	1354	72.7	41.0	135.729	F
B - Whaddon Road	379	95	1265	390	395	417	42.4	39.8	379.779	F
C - Standing Way (W)	1346	337	221	1343	1388	1434	5.8	2.9	7.761	A

18:00 - 18:15

Arm	Total Demand (Veh/hr)	Junction Arrivals (Veh)	Circulating flow (Veh/hr)	Throughput (Veh/hr)	Average throughput (PCU/hr)	Throughput (exit side) (Veh/hr)	Start queue (Veh)	End queue (Veh)	Delay (s)	Unsignalised level of service
A - Standing Way (E)	1130	283	175	1197	1305	1195	41.0	5.6	44.794	E
B - Whaddon Road	319	80	1027	428	422	345	39.8	15.4	212.985	F
C - Standing Way (W)	1124	281	244	1125	1157	1210	2.9	1.8	6.064	A

Lane Results

Lane Level notation: Lane Level 1 is always closest to the junction.

Lanes: Main Results for each time segment

16:45 - 17:00

Arm	Side	Lane level	Lane	Destination arms	Total Demand (Veh/hr)	Capacity (Veh/hr)	RFC	Throughput (Veh/hr)	Average throughput (PCU/hr)	Start queue (Veh)	End queue (Veh)	Delay (s)	Unsignalised level of service
A - Standing Way (E)	Entry	1	1	B	170	1016	0.167	170	172	0.0	0.2	4.261	A
			2	A, C	956	1318	0.726	957	966	0.0	2.6	9.936	A
	Exit	1	1		1132			1132	1152	0.0	0.0	0.000	A
B - Whaddon Road	Entry	1	1	C	142	340	0.419	143	142	0.0	0.7	17.461	C
			2	A, B	180	350	0.515	178	177	0.0	1.1	19.723	C
		2	1	(A, B, C)	323			322	327	0.0	0.2	1.232	A
	Exit	1	1		348			348	349	0.0	0.0	0.000	A
C - Standing Way (W)	Entry	1	1	A	529	1005	0.526	528	539	0.0	0.8	5.556	A
			2	A, B, C	599	1006	0.596	601	610	0.0	1.0	6.071	A
		2	1	(A, B, C)	1128			1128	1156	0.0	0.0	0.000	A
	Exit	1	1		1098			1098	1105	0.0	0.0	0.000	A

17:00 - 17:15

Arm	Side	Lane level	Lane	Destination arms	Total Demand (Veh/hr)	Capacity (Veh/hr)	RFC	Throughput (Veh/hr)	Average throughput (PCU/hr)	Start queue (Veh)	End queue (Veh)	Delay (s)	Unsignalised level of service
A - Standing Way (E)	Entry	1	1	B	203	1008	0.201	203	206	0.2	0.3	4.451	A
			2	A, C	1149	1307	0.880	1148	1155	2.6	6.8	19.860	C
	Exit	1	1		1358			1358	1376	0.0	0.0	0.000	A
B - Whaddon Road	Entry	1	1	C	162	279	0.579	162	165	0.7	1.3	25.339	D
			2	A, B	215	288	0.748	214	209	1.1	2.3	33.699	D
		2	1	(A, B, C)	382			377	381	0.2	1.7	9.555	A
	Exit	1	1		411			411	419	0.0	0.0	0.000	A
C - Standing Way (W)	Entry	1	1	A	645	994	0.649	646	655	0.8	1.3	7.125	A
			2	A, B, C	703	995	0.706	704	721	1.0	1.5	7.719	A
		2	1	(A, B, C)	1348			1348	1381	0.0	0.0	0.002	A
	Exit	1	1		1308			1308	1318	0.0	0.0	0.000	A

17:15 - 17:30

Arm	Side	Lane level	Lane	Destination arms	Total Demand (Veh/hr)	Capacity (Veh/hr)	RFC	Throughput (Veh/hr)	Average throughput (PCU/hr)	Start queue (Veh)	End queue (Veh)	Delay (s)	Unsignalised level of service
A - Standing Way (E)	Entry	1	1	B	251	995	0.252	250	254	0.3	0.4	4.801	A
			2	A, C	1402	1288	1.088	1273	1285	6.8	42.8	75.503	F
	Exit	1	1		1609			1609	1635	0.0	0.0	0.000	A
B - Whaddon Road	Entry	1	1	C	174	239	0.726	171	177	1.3	2.1	39.560	E
			2	A, B	220	246	0.894	219	218	2.3	3.6	54.359	F
		2	1	(A, B, C)	465			394	405	1.7	17.6	90.320	F
	Exit	1	1		503			503	511	0.0	0.0	0.000	A
C - Standing Way (W)	Entry	1	1	A	800	990	0.807	799	814	1.3	2.7	11.643	B
			2	A, B, C	843	993	0.848	842	857	1.5	3.1	12.485	B
		2	1	(A, B, C)	1643			1642	1683	0.0	0.1	0.146	A
	Exit	1	1		1441			1441	1459	0.0	0.0	0.000	A

17:30 - 17:45

Arm	Side	Lane level	Lane	Destination arms	Total Demand (Veh/hr)	Capacity (Veh/hr)	RFC	Throughput (Veh/hr)	Average throughput (PCU/hr)	Start queue (Veh)	End queue (Veh)	Delay (s)	Unsignalised level of service
A - Standing Way (E)	Entry	1	1	B	254	993	0.256	255	256	0.4	0.3	5.005	A
			2	A, C	1398	1285	1.088	1290	1310	42.8	72.4	164.315	F
	Exit	1	1		1607			1607	1644	0.0	0.0	0.000	A
B - Whaddon Road	Entry	1	1	C	170	232	0.729	169	177	2.1	2.2	44.422	E
			2	A, B	220	240	0.915	221	219	3.6	4.0	63.783	F
		2	1	(A, B, C)	466			389	398	17.6	36.3	256.279	F
	Exit	1	1		511			511	520	0.0	0.0	0.000	A
C - Standing Way (W)	Entry	1	1	A	798	992	0.804	798	821	2.7	2.7	12.393	B
			2	A, B, C	841	991	0.849	841	865	3.1	3.0	13.304	B
		2	1	(A, B, C)	1640			1639	1686	0.1	0.1	0.252	A
	Exit	1	1		1456			1456	1483	0.0	0.0	0.000	A

17:45 - 18:00

Arm	Side	Lane level	Lane	Destination arms	Total Demand (Veh/hr)	Capacity (Veh/hr)	RFC	Throughput (Veh/hr)	Average throughput (PCU/hr)	Start queue (Veh)	End queue (Veh)	Delay (s)	Unsignalised level of service
A - Standing Way (E)	Entry	1	1	B	206	1008	0.205	207	210	0.3	0.3	4.413	A
			2	A, C	1144	1304	0.878	1265	1305	72.4	40.8	159.344	F
	Exit	1	1		1354			1354	1394	0.0	0.0	0.000	A
B - Whaddon Road	Entry	1	1	C	169	241	0.702	171	176	2.2	2.0	44.806	E
			2	A, B	220	249	0.886	219	219	4.0	4.0	64.242	F
		2	1	(A, B, C)	379			390	394	36.3	33.8	325.626	F
	Exit	1	1		417			417	426	0.0	0.0	0.000	A
C - Standing Way (W)	Entry	1	1	A	645	993	0.650	644	662	2.7	1.3	7.425	A
			2	A, B, C	701	994	0.706	699	726	3.0	1.6	8.023	A
		2	1	(A, B, C)	1346			1346	1376	0.1	0.0	0.034	A
	Exit	1	1		1434			1434	1478	0.0	0.0	0.000	A

18:00 - 18:15

Arm	Side	Lane level	Lane	Destination arms	Total Demand (Veh/hr)	Capacity (Veh/hr)	RFC	Throughput (Veh/hr)	Average throughput (PCU/hr)	Start queue (Veh)	End queue (Veh)	Delay (s)	Unsignalised level of service
A - Standing Way (E)	Entry	1	1	B	171	1018	0.168	170	175	0.3	0.2	4.273	A
			2	A, C	959	1319	0.728	1027	1130	40.8	5.4	52.108	F
	Exit	1	1		1195			1195	1216	0.0	0.0	0.000	A
B - Whaddon Road	Entry	1	1	C	182	317	0.574	186	186	2.0	1.4	35.592	E
			2	A, B	234	327	0.717	242	236	4.0	2.6	50.343	F
		2	1	(A, B, C)	319			416	414	33.8	11.3	172.634	F
	Exit	1	1		345			345	354	0.0	0.0	0.000	A
C - Standing Way (W)	Entry	1	1	A	527	984	0.536	528	544	1.3	0.8	5.802	A
			2	A, B, C	597	985	0.606	598	613	1.6	1.0	6.297	A
		2	1	(A, B, C)	1124			1124	1152	0.0	0.0	0.000	A
	Exit	1	1		1210			1210	1313	0.0	0.0	0.000	A

2033 Base + CD + D - ST, AM

Data Errors and Warnings

Severity	Area	Item	Description
Warning	Lane Simulation	A1 - [Lane Simulation]	This analysis set uses Lane Simulation mode. This is provided as an investigative tool and the user should apply judgement when interpreting the results.
Last Run	Lane Simulation	B - Whaddon Road - Lane Simulation	Arm B: Queue at end of modelled period is greater than 10 PCU. Delay is likely to have been underestimated.
Warning	Geometry	C - Standing Way (W) - Roundabout Geometry	Effective flare length is over 30m, which is outside the normal range. Treat capacities with increasing caution.

Junction Network

Junctions

Junction	Name	Junction type	Use circulating lanes	Arm order	Junction Delay (s)	Junction LOS
J6	Bottledump Roundabout	Standard Roundabout		A, B, C	142.89	F

Junction Network Options

Driving side	Lighting
Left	Normal/unknown

Traffic Demand

Demand Set Details

ID	Scenario name	Time Period name	Traffic profile type	Start time (HH:mm)	Finish time (HH:mm)	Time segment length (min)	Run automatically
D19	2033 Base + CD + D - ST	AM	ONE HOUR	07:30	09:00	15	✓

Vehicle mix varies over turn	Vehicle mix varies over entry	Vehicle mix source	PCU Factor for a HV (PCU)
✓	✓	HV Percentages	2.00

Demand overview (Traffic)

Arm	Linked arm	Profile type	Use O-D data	Average Demand (Veh/hr)	Scaling Factor (%)
A - Standing Way (E)		ONE HOUR	✓	1261	100.000
B - Whaddon Road		ONE HOUR	✓	592	100.000
C - Standing Way (W)		ONE HOUR	✓	1665	100.000

Origin-Destination Data

Demand (Veh/hr)

		To		
		A - Standing Way (E)	B - Whaddon Road	C - Standing Way (W)
From	A - Standing Way (E)	3	223	1035
	B - Whaddon Road	320	0	272
	C - Standing Way (W)	1471	194	0

Proportions

		To		
		A - Standing Way (E)	B - Whaddon Road	C - Standing Way (W)
From	A - Standing Way (E)	0.00	0.18	0.82
	B - Whaddon Road	0.54	0.00	0.46
	C - Standing Way (W)	0.88	0.12	0.00

Vehicle Mix

Heavy Vehicle Percentages

		To		
		A - Standing Way (E)	B - Whaddon Road	C - Standing Way (W)
From	A - Standing Way (E)	33	2	6
	B - Whaddon Road	2	0	3
	C - Standing Way (W)	4	6	0

Average PCU Per Veh

		To		
		A - Standing Way (E)	B - Whaddon Road	C - Standing Way (W)
From	A - Standing Way (E)	1.333	1.022	1.057
	B - Whaddon Road	1.022	1.000	1.026
	C - Standing Way (W)	1.042	1.056	1.000

Detailed Demand Data

Demand for each time segment

Arm	Time Segment	Demand (Veh/hr)	Demand in PCU (PCU/hr)
A - Standing Way (E)	07:30-07:45	950	998
	07:45-08:00	1134	1192
	08:00-08:15	1389	1460
	08:15-08:30	1389	1460
	08:30-08:45	1134	1192
	08:45-09:00	950	998
B - Whaddon Road	07:30-07:45	445	456
	07:45-08:00	532	545
	08:00-08:15	651	667
	08:15-08:30	651	667
	08:30-08:45	532	545
	08:45-09:00	445	456
C - Standing Way (W)	07:30-07:45	1254	1308
	07:45-08:00	1497	1562
	08:00-08:15	1833	1914
	08:15-08:30	1833	1914
	08:30-08:45	1497	1562
	08:45-09:00	1254	1308

Results

Results Summary for whole modelled period

Arm	Max Delay (s)	Max Queue (Veh)	Max LOS	Average Demand (Veh/hr)	Total Junction Arrivals (Veh)
A - Standing Way (E)	24.44	10.6	C	1161	1742
B - Whaddon Road	696.21	107.9	F	543	815
C - Standing Way (W)	40.96	23.2	E	1530	2296

Main Results for each time segment

07:30 - 07:45

Arm	Total Demand (Veh/hr)	Junction Arrivals (Veh)	Circulating flow (Veh/hr)	Throughput (Veh/hr)	Average throughput (PCU/hr)	Throughput (exit side) (Veh/hr)	Start queue (Veh)	End queue (Veh)	Delay (s)	Unsignalised level of service
A - Standing Way (E)	946	236	149	945	994	1367	0.0	1.8	6.748	A
B - Whaddon Road	455	114	781	461	452	312	0.0	3.0	24.224	C
C - Standing Way (W)	1259	315	254	1261	1307	988	0.0	2.3	7.218	A

07:45 - 08:00

Arm	Total Demand (Veh/hr)	Junction Arrivals (Veh)	Circulating flow (Veh/hr)	Throughput (Veh/hr)	Average throughput (PCU/hr)	Throughput (exit side) (Veh/hr)	Start queue (Veh)	End queue (Veh)	Delay (s)	Unsignalised level of service
A - Standing Way (E)	1131	283	177	1138	1188	1592	1.8	2.9	9.504	A
B - Whaddon Road	528	132	936	498	505	379	3.0	11.5	57.776	F
C - Standing Way (W)	1496	374	271	1498	1556	1163	2.3	4.6	10.451	B

08:00 - 08:15

Arm	Total Demand (Veh/hr)	Junction Arrivals (Veh)	Circulating flow (Veh/hr)	Throughput (Veh/hr)	Average throughput (PCU/hr)	Throughput (exit side) (Veh/hr)	Start queue (Veh)	End queue (Veh)	Delay (s)	Unsignalised level of service
A - Standing Way (E)	1391	348	208	1386	1430	1850	2.9	8.7	19.609	C
B - Whaddon Road	654	164	1142	450	481	453	11.5	56.1	262.628	F
C - Standing Way (W)	1849	462	242	1816	1863	1350	4.6	20.2	31.007	D

08:15 - 08:30

Arm	Total Demand (Veh/hr)	Junction Arrivals (Veh)	Circulating flow (Veh/hr)	Throughput (Veh/hr)	Average throughput (PCU/hr)	Throughput (exit side) (Veh/hr)	Start queue (Veh)	End queue (Veh)	Delay (s)	Unsignalised level of service
A - Standing Way (E)	1407	352	217	1397	1465	1867	8.7	10.5	24.438	C
B - Whaddon Road	643	161	1144	455	456	471	56.1	106.8	639.296	F
C - Standing Way (W)	1853	463	250	1834	1923	1349	20.2	23.2	40.960	E

08:30 - 08:45

Arm	Total Demand (Veh/hr)	Junction Arrivals (Veh)	Circulating flow (Veh/hr)	Throughput (Veh/hr)	Average throughput (PCU/hr)	Throughput (exit side) (Veh/hr)	Start queue (Veh)	End queue (Veh)	Delay (s)	Unsignalised level of service
A - Standing Way (E)	1141	285	172	1137	1215	1629	10.5	3.6	12.970	B
B - Whaddon Road	531	133	930	561	539	379	106.8	107.9	696.213	F
C - Standing Way (W)	1492	373	305	1496	1633	1186	23.2	5.2	18.699	C

08:45 - 09:00

Arm	Total Demand (Veh/hr)	Junction Arrivals (Veh)	Circulating flow (Veh/hr)	Throughput (Veh/hr)	Average throughput (PCU/hr)	Throughput (exit side) (Veh/hr)	Start queue (Veh)	End queue (Veh)	Delay (s)	Unsignalised level of service
A - Standing Way (E)	952	238	140	952	1005	1446	3.6	1.5	7.279	A
B - Whaddon Road	452	113	783	641	639	310	107.9	64.2	459.541	F
C - Standing Way (W)	1236	309	352	1234	1313	1072	5.2	2.9	8.044	A

Lane Results

Lane Level notation: Lane Level 1 is always closest to the junction.

Lanes: Main Results for each time segment

07:30 - 07:45

Arm	Side	Lane level	Lane	Destination arms	Total Demand (Veh/hr)	Capacity (Veh/hr)	RFC	Throughput (Veh/hr)	Average throughput (PCU/hr)	Start queue (Veh)	End queue (Veh)	Delay (s)	Unsignalised level of service
A - Standing Way (E)	Entry	1	1	B	164	1018	0.161	164	172	0.0	0.2	4.163	A
			2	A, C	782	1277	0.612	781	823	0.0	1.6	7.305	A
	Exit	1	1		1367			1367	1401	0.0	0.0	0.000	A
B - Whaddon Road	Entry	1	1	C	208	386	0.539	209	207	0.0	1.0	18.044	C
			2	A, B	250	390	0.641	252	245	0.0	1.5	21.709	C
		2	1	(A, B, C)	455			459	462	0.0	0.5	4.108	A
	Exit	1	1		312			312	325	0.0	0.0	0.000	A
C - Standing Way (W)	Entry	1	1	A	607	962	0.632	608	631	0.0	1.1	6.953	A
			2	A, B, C	652	961	0.678	653	676	0.0	1.2	7.467	A
		2	1	(A, B, C)	1259			1259	1317	0.0	0.0	0.000	A
	Exit	1	1		988			988	1027	0.0	0.0	0.000	A

07:45 - 08:00

Arm	Side	Lane level	Lane	Destination arms	Total Demand (Veh/hr)	Capacity (Veh/hr)	RFC	Throughput (Veh/hr)	Average throughput (PCU/hr)	Start queue (Veh)	End queue (Veh)	Delay (s)	Unsignalised level of service
A - Standing Way (E)	Entry	1	1	B	202	1007	0.201	202	206	0.2	0.3	4.524	A
			2	A, C	929	1268	0.733	936	982	1.6	2.6	10.585	B
	Exit	1	1		1592			1592	1654	0.0	0.0	0.000	A
B - Whaddon Road	Entry	1	1	C	233	335	0.697	230	232	1.0	1.8	25.965	D
			2	A, B	270	338	0.797	268	272	1.5	2.8	33.528	D
		2	1	(A, B, C)	528			503	513	0.5	6.8	27.236	D
	Exit	1	1		379			379	386	0.0	0.0	0.000	A
C - Standing Way (W)	Entry	1	1	A	735	954	0.770	737	763	1.1	2.2	10.102	B
			2	A, B, C	760	957	0.794	761	793	1.2	2.3	10.718	B
		2	1	(A, B, C)	1496			1495	1565	0.0	0.1	0.025	A
	Exit	1	1		1163			1163	1210	0.0	0.0	0.000	A

08:00 - 08:15

Arm	Side	Lane level	Lane	Destination arms	Total Demand (Veh/hr)	Capacity (Veh/hr)	RFC	Throughput (Veh/hr)	Average throughput (PCU/hr)	Start queue (Veh)	End queue (Veh)	Delay (s)	Unsignalised level of service
A - Standing Way (E)	Entry	1	1	B	245	993	0.247	245	248	0.3	0.3	4.743	A
			2	A, C	1147	1253	0.915	1142	1182	2.6	8.4	22.771	C
	Exit	1	1		1850			1850	1911	0.0	0.0	0.000	A
B - Whaddon Road	Entry	1	1	C	211	268	0.787	212	222	1.8	2.4	38.315	E
			2	A, B	240	268	0.897	238	259	2.8	3.6	50.335	F
		2	1	(A, B, C)	654			450	487	6.8	50.0	215.963	F
	Exit	1	1		453			453	464	0.0	0.0	0.000	A
C - Standing Way (W)	Entry	1	1	A	912	963	0.946	907	926	2.2	6.8	23.946	C
			2	A, B, C	913	962	0.950	908	937	2.3	7.1	24.941	C
		2	1	(A, B, C)	1849			1825	1903	0.1	6.3	6.394	A
	Exit	1	1		1350			1350	1398	0.0	0.0	0.000	A

08:15 - 08:30

Arm	Side	Lane level	Lane	Destination arms	Total Demand (Veh/hr)	Capacity (Veh/hr)	RFC	Throughput (Veh/hr)	Average throughput (PCU/hr)	Start queue (Veh)	End queue (Veh)	Delay (s)	Unsignalised level of service
A - Standing Way (E)	Entry	1	1	B	253	992	0.255	254	259	0.3	0.3	4.918	A
			2	A, C	1154	1249	0.923	1144	1206	8.4	10.2	28.750	D
	Exit	1	1		1867			1867	1945	0.0	0.0	0.000	A
B - Whaddon Road	Entry	1	1	C	208	268	0.781	209	209	2.4	2.3	41.825	E
			2	A, B	246	268	0.919	246	247	3.6	3.8	55.734	F
		2	1	(A, B, C)	643			454	456	50.0	100.6	594.924	F
	Exit	1	1		471			471	488	0.0	0.0	0.000	A
C - Standing Way (W)	Entry	1	1	A	920	964	0.954	918	952	6.8	6.8	25.616	D
			2	A, B, C	920	961	0.957	916	971	7.1	7.3	26.404	D
		2	1	(A, B, C)	1853			1840	1923	6.3	9.0	14.958	B
	Exit	1	1		1349			1349	1411	0.0	0.0	0.000	A

08:30 - 08:45

Arm	Side	Lane level	Lane	Destination arms	Total Demand (Veh/hr)	Capacity (Veh/hr)	RFC	Throughput (Veh/hr)	Average throughput (PCU/hr)	Start queue (Veh)	End queue (Veh)	Delay (s)	Unsignalised level of service
A - Standing Way (E)	Entry	1	1	B	206	1001	0.206	207	206	0.3	0.3	4.576	A
			2	A, C	934	1268	0.737	930	1010	10.2	3.3	14.787	B
	Exit	1	1		1629			1629	1737	0.0	0.0	0.000	A
B - Whaddon Road	Entry	1	1	C	257	338	0.761	260	248	2.3	2.2	34.276	D
			2	A, B	302	339	0.892	301	291	3.8	3.8	46.919	E
		2	1	(A, B, C)	531			560	539	100.6	101.8	660.671	F
	Exit	1	1		379			379	397	0.0	0.0	0.000	A
C - Standing Way (W)	Entry	1	1	A	726	948	0.766	726	799	6.8	2.4	14.932	B
			2	A, B, C	768	940	0.818	771	834	7.3	2.6	15.416	C
		2	1	(A, B, C)	1492			1494	1595	9.0	0.2	3.952	A
	Exit	1	1		1186			1186	1254	0.0	0.0	0.000	A

08:45 - 09:00

Arm	Side	Lane level	Lane	Destination arms	Total Demand (Veh/hr)	Capacity (Veh/hr)	RFC	Throughput (Veh/hr)	Average throughput (PCU/hr)	Start queue (Veh)	End queue (Veh)	Delay (s)	Unsignalised level of service
A - Standing Way (E)	Entry	1	1	B	169	1014	0.167	169	175	0.3	0.2	4.351	A
			2	A, C	782	1285	0.609	783	830	3.3	1.4	7.918	A
	Exit	1	1		1446			1446	1509	0.0	0.0	0.000	A
B - Whaddon Road	Entry	1	1	C	290	389	0.744	292	291	2.2	2.2	28.099	D
			2	A, B	347	389	0.890	349	348	3.8	3.5	39.553	E
		2	1	(A, B, C)	452			636	637	101.8	58.5	427.543	F
	Exit	1	1		310			310	330	0.0	0.0	0.000	A
C - Standing Way (W)	Entry	1	1	A	599	933	0.642	597	629	2.4	1.4	7.769	A
			2	A, B, C	637	928	0.687	637	683	2.6	1.5	8.206	A
		2	1	(A, B, C)	1236			1236	1304	0.2	0.0	0.058	A
	Exit	1	1		1072			1072	1118	0.0	0.0	0.000	A

2033 Base + CD + D - ST, PM

Data Errors and Warnings

Severity	Area	Item	Description
Warning	Lane Simulation	A1 - [Lane Simulation]	This analysis set uses Lane Simulation mode. This is provided as an investigative tool and the user should apply judgement when interpreting the results.
Last Run	Lane Simulation	B - Whaddon Road - Lane Simulation	Arm B: Queue at end of modelled period is greater than 10 PCU. Delay is likely to have been underestimated.
Warning	Geometry	C - Standing Way (W) - Roundabout Geometry	Effective flare length is over 30m, which is outside the normal range. Treat capacities with increasing caution.

Junction Network

Junctions

Junction	Name	Junction type	Use circulating lanes	Arm order	Junction Delay (s)	Junction LOS
J6	Bottledump Roundabout	Standard Roundabout		A, B, C	104.15	F

Junction Network Options

Driving side	Lighting
Left	Normal/unknown

Traffic Demand

Demand Set Details

ID	Scenario name	Time Period name	Traffic profile type	Start time (HH:mm)	Finish time (HH:mm)	Time segment length (min)	Run automatically
D20	2033 Base + CD + D - ST	PM	ONE HOUR	16:45	18:15	15	✓

Vehicle mix varies over turn	Vehicle mix varies over entry	Vehicle mix source	PCU Factor for a HV (PCU)
✓	✓	HV Percentages	2.00

Demand overview (Traffic)

Arm	Linked arm	Profile type	Use O-D data	Average Demand (Veh/hr)	Scaling Factor (%)
A - Standing Way (E)		ONE HOUR	✓	1450	100.000
B - Whaddon Road		ONE HOUR	✓	456	100.000
C - Standing Way (W)		ONE HOUR	✓	1419	100.000

Origin-Destination Data

Demand (Veh/hr)

		To		
		A - Standing Way (E)	B - Whaddon Road	C - Standing Way (W)
From	A - Standing Way (E)	2	230	1218
	B - Whaddon Road	249	0	207
	C - Standing Way (W)	1168	251	0

Proportions

		To		
		A - Standing Way (E)	B - Whaddon Road	C - Standing Way (W)
From	A - Standing Way (E)	0.00	0.16	0.84
	B - Whaddon Road	0.55	0.00	0.45
	C - Standing Way (W)	0.82	0.18	0.00

Vehicle Mix

Heavy Vehicle Percentages

		To		
		A - Standing Way (E)	B - Whaddon Road	C - Standing Way (W)
From	A - Standing Way (E)	50	1	2
	B - Whaddon Road	0	0	3
	C - Standing Way (W)	3	2	0

Average PCU Per Veh

		To		
		A - Standing Way (E)	B - Whaddon Road	C - Standing Way (W)
From	A - Standing Way (E)	1.500	1.010	1.018
	B - Whaddon Road	1.000	1.000	1.031
	C - Standing Way (W)	1.025	1.019	1.000

Detailed Demand Data

Demand for each time segment

Arm	Time Segment	Demand (Veh/hr)	Demand in PCU (PCU/hr)
A - Standing Way (E)	16:45-17:00	1092	1111
	17:00-17:15	1303	1327
	17:15-17:30	1596	1625
	17:30-17:45	1596	1625
	17:45-18:00	1303	1327
	18:00-18:15	1092	1111
B - Whaddon Road	16:45-17:00	343	348
	17:00-17:15	410	416
	17:15-17:30	502	509
	17:30-17:45	502	509
	17:45-18:00	410	416
	18:00-18:15	343	348
C - Standing Way (W)	16:45-17:00	1068	1094
	17:00-17:15	1275	1306
	17:15-17:30	1562	1600
	17:30-17:45	1562	1600
	17:45-18:00	1275	1306
	18:00-18:15	1068	1094

Results

Results Summary for whole modelled period

Arm	Max Delay (s)	Max Queue (Veh)	Max LOS	Average Demand (Veh/hr)	Total Junction Arrivals (Veh)
A - Standing Way (E)	103.50	50.3	F	1331	1997
B - Whaddon Road	400.53	48.5	F	416	624
C - Standing Way (W)	10.89	5.0	B	1301	1952

Main Results for each time segment

16:45 - 17:00

Arm	Total Demand (Veh/hr)	Junction Arrivals (Veh)	Circulating flow (Veh/hr)	Throughput (Veh/hr)	Average throughput (PCU/hr)	Throughput (exit side) (Veh/hr)	Start queue (Veh)	End queue (Veh)	Delay (s)	Unsignalised level of service
A - Standing Way (E)	1086	271	191	1083	1101	1067	0.0	2.6	8.150	A
B - Whaddon Road	343	86	913	344	343	361	0.0	1.9	19.635	C
C - Standing Way (W)	1069	267	190	1068	1088	1067	0.0	1.7	5.508	A

17:00 - 17:15

Arm	Total Demand (Veh/hr)	Junction Arrivals (Veh)	Circulating flow (Veh/hr)	Throughput (Veh/hr)	Average throughput (PCU/hr)	Throughput (exit side) (Veh/hr)	Start queue (Veh)	End queue (Veh)	Delay (s)	Unsignalised level of service
A - Standing Way (E)	1310	328	218	1303	1308	1267	2.6	5.9	13.555	B
B - Whaddon Road	409	102	1097	402	396	424	1.9	5.6	39.567	E
C - Standing Way (W)	1265	316	223	1263	1299	1276	1.7	2.4	7.017	A

17:15 - 17:30

Arm	Total Demand (Veh/hr)	Junction Arrivals (Veh)	Circulating flow (Veh/hr)	Throughput (Veh/hr)	Average throughput (PCU/hr)	Throughput (exit side) (Veh/hr)	Start queue (Veh)	End queue (Veh)	Delay (s)	Unsignalised level of service
A - Standing Way (E)	1603	401	278	1498	1511	1518	5.9	34.2	53.514	F
B - Whaddon Road	501	125	1249	410	423	526	5.6	25.9	142.062	F
C - Standing Way (W)	1573	393	225	1570	1590	1434	2.4	4.9	10.641	B

17:30 - 17:45

Arm	Total Demand (Veh/hr)	Junction Arrivals (Veh)	Circulating flow (Veh/hr)	Throughput (Veh/hr)	Average throughput (PCU/hr)	Throughput (exit side) (Veh/hr)	Start queue (Veh)	End queue (Veh)	Delay (s)	Unsignalised level of service
A - Standing Way (E)	1596	399	277	1537	1557	1518	34.2	50.3	103.497	F
B - Whaddon Road	492	123	1279	396	410	535	25.9	48.4	340.193	F
C - Standing Way (W)	1572	393	220	1575	1599	1456	4.9	4.7	10.891	B

17:45 - 18:00

Arm	Total Demand (Veh/hr)	Junction Arrivals (Veh)	Circulating flow (Veh/hr)	Throughput (Veh/hr)	Average throughput (PCU/hr)	Throughput (exit side) (Veh/hr)	Start queue (Veh)	End queue (Veh)	Delay (s)	Unsignalised level of service
A - Standing Way (E)	1309	327	225	1397	1447	1284	50.3	21.0	82.935	F
B - Whaddon Road	414	103	1189	430	428	433	48.4	45.9	400.528	F
C - Standing Way (W)	1270	317	238	1271	1314	1381	4.7	2.3	7.150	A

18:00 - 18:15

Arm	Total Demand (Veh/hr)	Junction Arrivals (Veh)	Circulating flow (Veh/hr)	Throughput (Veh/hr)	Average throughput (PCU/hr)	Throughput (exit side) (Veh/hr)	Start queue (Veh)	End queue (Veh)	Delay (s)	Unsignalised level of service
A - Standing Way (E)	1087	272	187	1106	1190	1125	21.0	3.0	21.289	C
B - Whaddon Road	338	85	934	459	475	359	45.9	14.9	206.589	F
C - Standing Way (W)	1058	264	253	1059	1098	1139	2.3	1.7	5.788	A

Lane Results

Lane Level notation: Lane Level 1 is always closest to the junction.

Lanes: Main Results for each time segment

16:45 - 17:00

Arm	Side	Lane level	Lane	Destination arms	Total Demand (Veh/hr)	Capacity (Veh/hr)	RFC	Throughput (Veh/hr)	Average throughput (PCU/hr)	Start queue (Veh)	End queue (Veh)	Delay (s)	Unsignalised level of service
A - Standing Way (E)	Entry	1	1	B	171	1012	0.169	170	173	0.0	0.3	4.375	A
			2	A, C	915	1312	0.698	913	928	0.0	2.3	8.856	A
	Exit	1	1		1067			1067	1082	0.0	0.0	0.000	A
B - Whaddon Road	Entry	1	1	C	156	353	0.441	156	159	0.0	0.8	17.262	C
			2	A, B	187	364	0.515	188	185	0.0	1.0	19.490	C
		2	1	(A, B, C)	343			343	351	0.0	0.1	1.119	A
	Exit	1	1		361			361	366	0.0	0.0	0.000	A
C - Standing Way (W)	Entry	1	1	A	492	1001	0.491	492	501	0.0	0.7	5.189	A
			2	A, B, C	578	1005	0.575	576	587	0.0	1.0	5.779	A
		2	1	(A, B, C)	1069			1069	1095	0.0	0.0	0.000	A
	Exit	1	1		1067			1067	1085	0.0	0.0	0.000	A

17:00 - 17:15

Arm	Side	Lane level	Lane	Destination arms	Total Demand (Veh/hr)	Capacity (Veh/hr)	RFC	Throughput (Veh/hr)	Average throughput (PCU/hr)	Start queue (Veh)	End queue (Veh)	Delay (s)	Unsignalised level of service
A - Standing Way (E)	Entry	1	1	B	206	1004	0.205	206	209	0.3	0.3	4.509	A
			2	A, C	1104	1301	0.849	1097	1099	2.3	5.6	15.272	C
	Exit	1	1		1267			1267	1289	0.0	0.0	0.000	A
B - Whaddon Road	Entry	1	1	C	183	294	0.621	181	182	0.8	1.5	25.451	D
			2	A, B	221	304	0.727	221	214	1.0	2.2	31.875	D
		2	1	(A, B, C)	409			403	404	0.1	1.9	10.267	B
	Exit	1	1		424			424	435	0.0	0.0	0.000	A
C - Standing Way (W)	Entry	1	1	A	597	993	0.601	595	612	0.7	1.1	6.629	A
			2	A, B, C	668	992	0.674	667	687	1.0	1.3	7.362	A
		2	1	(A, B, C)	1265			1265	1302	0.0	0.0	0.000	A
	Exit	1	1		1276			1276	1278	0.0	0.0	0.000	A

17:15 - 17:30

Arm	Side	Lane level	Lane	Destination arms	Total Demand (Veh/hr)	Capacity (Veh/hr)	RFC	Throughput (Veh/hr)	Average throughput (PCU/hr)	Start queue (Veh)	End queue (Veh)	Delay (s)	Unsignalised level of service
A - Standing Way (E)	Entry	1	1	B	249	986	0.252	248	252	0.3	0.4	4.889	A
			2	A, C	1353	1276	1.061	1249	1259	5.6	33.8	62.531	F
	Exit	1	1		1518			1518	1540	0.0	0.0	0.000	A
B - Whaddon Road	Entry	1	1	C	188	246	0.762	187	198	1.5	2.2	40.058	E
			2	A, B	223	253	0.881	223	226	2.2	3.6	51.366	F
		2	1	(A, B, C)	501			411	432	1.9	20.1	94.343	F
	Exit	1	1		526			526	532	0.0	0.0	0.000	A
C - Standing Way (W)	Entry	1	1	A	758	991	0.764	756	766	1.1	2.3	10.123	B
			2	A, B, C	815	993	0.821	814	824	1.3	2.6	11.045	B
		2	1	(A, B, C)	1573			1573	1600	0.0	0.0	0.039	A
	Exit	1	1		1434			1434	1453	0.0	0.0	0.000	A

17:30 - 17:45

Arm	Side	Lane level	Lane	Destination arms	Total Demand (Veh/hr)	Capacity (Veh/hr)	RFC	Throughput (Veh/hr)	Average throughput (PCU/hr)	Start queue (Veh)	End queue (Veh)	Delay (s)	Unsignalised level of service
A - Standing Way (E)	Entry	1	1	B	257	986	0.261	257	260	0.4	0.3	4.950	A
			2	A, C	1338	1277	1.047	1279	1297	33.8	49.9	122.472	F
	Exit	1	1		1518			1518	1544	0.0	0.0	0.000	A
B - Whaddon Road	Entry	1	1	C	179	236	0.759	179	190	2.2	2.3	45.763	E
			2	A, B	218	244	0.893	217	220	3.6	3.8	61.591	F
		2	1	(A, B, C)	492			397	411	20.1	42.3	286.320	F
	Exit	1	1		535			535	539	0.0	0.0	0.000	A
C - Standing Way (W)	Entry	1	1	A	757	992	0.763	759	770	2.3	2.1	10.380	B
			2	A, B, C	815	993	0.821	816	830	2.6	2.6	11.243	B
		2	1	(A, B, C)	1572			1572	1599	0.0	0.0	0.062	A
	Exit	1	1		1456			1456	1483	0.0	0.0	0.000	A

17:45 - 18:00

Arm	Side	Lane level	Lane	Destination arms	Total Demand (Veh/hr)	Capacity (Veh/hr)	RFC	Throughput (Veh/hr)	Average throughput (PCU/hr)	Start queue (Veh)	End queue (Veh)	Delay (s)	Unsignalised level of service
A - Standing Way (E)	Entry	1	1	B	208	1003	0.208	207	211	0.3	0.3	4.537	A
			2	A, C	1101	1298	0.848	1189	1236	49.9	20.8	97.838	F
	Exit	1	1		1284			1284	1317	0.0	0.0	0.000	A
B - Whaddon Road	Entry	1	1	C	195	264	0.738	194	197	2.3	2.3	43.371	E
			2	A, B	234	274	0.855	236	231	3.8	3.6	58.606	F
		2	1	(A, B, C)	414			429	427	42.3	40.1	352.225	F
	Exit	1	1		433			433	441	0.0	0.0	0.000	A
C - Standing Way (W)	Entry	1	1	A	596	985	0.605	598	617	2.1	1.0	6.819	A
			2	A, B, C	674	987	0.683	673	697	2.6	1.4	7.441	A
		2	1	(A, B, C)	1270			1270	1304	0.0	0.0	0.000	A
	Exit	1	1		1381			1381	1430	0.0	0.0	0.000	A

18:00 - 18:15

Arm	Side	Lane level	Lane	Destination arms	Total Demand (Veh/hr)	Capacity (Veh/hr)	RFC	Throughput (Veh/hr)	Average throughput (PCU/hr)	Start queue (Veh)	End queue (Veh)	Delay (s)	Unsignalised level of service
A - Standing Way (E)	Entry	1	1	B	172	1013	0.170	172	175	0.3	0.2	4.293	A
			2	A, C	915	1312	0.697	934	1014	20.8	2.8	24.494	C
	Exit	1	1		1125			1125	1162	0.0	0.0	0.000	A
B - Whaddon Road	Entry	1	1	C	202	347	0.584	207	219	2.3	1.4	33.082	D
			2	A, B	242	357	0.678	251	255	3.6	2.2	42.821	E
		2	1	(A, B, C)	338			444	465	40.1	11.3	171.269	F
	Exit	1	1		359			359	370	0.0	0.0	0.000	A
C - Standing Way (W)	Entry	1	1	A	488	983	0.497	489	508	1.0	0.7	5.483	A
			2	A, B, C	570	982	0.580	570	591	1.4	1.0	6.050	A
		2	1	(A, B, C)	1058			1058	1096	0.0	0.0	0.000	A
	Exit	1	1		1139			1139	1231	0.0	0.0	0.000	A

2033 Base + CD + SP (ST), AM

Data Errors and Warnings

Severity	Area	Item	Description
Warning	Lane Simulation	A1 - [Lane Simulation]	This analysis set uses Lane Simulation mode. This is provided as an investigative tool and the user should apply judgement when interpreting the results.
Warning	Geometry	C - Standing Way (W) - Roundabout Geometry	Effective flare length is over 30m, which is outside the normal range. Treat capacities with increasing caution.

Junction Network

Junctions

Junction	Name	Junction type	Use circulating lanes	Arm order	Junction Delay (s)	Junction LOS
J6	Bottledump Roundabout	Standard Roundabout		A, B, C	42.44	E

Junction Network Options

Driving side	Lighting
Left	Normal/unknown

Traffic Demand

Demand Set Details

ID	Scenario name	Time Period name	Traffic profile type	Start time (HH:mm)	Finish time (HH:mm)	Time segment length (min)	Run automatically
D21	2033 Base + CD + SP (ST)	AM	ONE HOUR	07:30	09:00	15	✓

Vehicle mix varies over turn	Vehicle mix varies over entry	Vehicle mix source	PCU Factor for a HV (PCU)
✓	✓	HV Percentages	2.00

Demand overview (Traffic)

Arm	Linked arm	Profile type	Use O-D data	Average Demand (Veh/hr)	Scaling Factor (%)
A - Standing Way (E)		ONE HOUR	✓	1237	100.000
B - Whaddon Road		ONE HOUR	✓	445	100.000
C - Standing Way (W)		ONE HOUR	✓	1613	100.000

Origin-Destination Data

Demand (Veh/hr)

		To		
		A - Standing Way (E)	B - Whaddon Road	C - Standing Way (W)
From	A - Standing Way (E)	3	223	1010
	B - Whaddon Road	215	0	230
	C - Standing Way (W)	1468	144	0

Proportions

		To		
		A - Standing Way (E)	B - Whaddon Road	C - Standing Way (W)
From	A - Standing Way (E)	0.00	0.18	0.82
	B - Whaddon Road	0.48	0.00	0.52
	C - Standing Way (W)	0.91	0.09	0.00

Vehicle Mix

Heavy Vehicle Percentages

		To		
		A - Standing Way (E)	B - Whaddon Road	C - Standing Way (W)
From	A - Standing Way (E)	33	2	6
	B - Whaddon Road	2	0	3
	C - Standing Way (W)	4	6	0

Average PCU Per Veh

		To		
		A - Standing Way (E)	B - Whaddon Road	C - Standing Way (W)
From	A - Standing Way (E)	1.333	1.022	1.057
	B - Whaddon Road	1.022	1.000	1.026
	C - Standing Way (W)	1.042	1.056	1.000

Detailed Demand Data

Demand for each time segment

Arm	Time Segment	Demand (Veh/hr)	Demand in PCU (PCU/hr)
A - Standing Way (E)	07:30-07:45	931	979
	07:45-08:00	1112	1169
	08:00-08:15	1362	1432
	08:15-08:30	1362	1432
	08:30-08:45	1112	1169
	08:45-09:00	931	979
B - Whaddon Road	07:30-07:45	335	343
	07:45-08:00	400	409
	08:00-08:15	490	502
	08:15-08:30	490	502
	08:30-08:45	400	409
	08:45-09:00	335	343
C - Standing Way (W)	07:30-07:45	1214	1267
	07:45-08:00	1450	1513
	08:00-08:15	1775	1852
	08:15-08:30	1775	1852
	08:30-08:45	1450	1513
	08:45-09:00	1214	1267

Results

Results Summary for whole modelled period

Arm	Max Delay (s)	Max Queue (Veh)	Max LOS	Average Demand (Veh/hr)	Total Junction Arrivals (Veh)
A - Standing Way (E)	19.72	7.8	C	1136	1704
B - Whaddon Road	176.12	26.0	F	407	611
C - Standing Way (W)	23.84	12.4	C	1478	2217

Main Results for each time segment

07:30 - 07:45

Arm	Total Demand (Veh/hr)	Junction Arrivals (Veh)	Circulating flow (Veh/hr)	Throughput (Veh/hr)	Average throughput (PCU/hr)	Throughput (exit side) (Veh/hr)	Start queue (Veh)	End queue (Veh)	Delay (s)	Unsignalised level of service
A - Standing Way (E)	931	233	109	931	971	1272	0.0	1.8	6.516	A
B - Whaddon Road	337	84	761	336	340	279	0.0	1.6	16.291	C
C - Standing Way (W)	1218	305	165	1217	1260	932	0.0	2.2	6.296	A

07:45 - 08:00

Arm	Total Demand (Veh/hr)	Junction Arrivals (Veh)	Circulating flow (Veh/hr)	Throughput (Veh/hr)	Average throughput (PCU/hr)	Throughput (exit side) (Veh/hr)	Start queue (Veh)	End queue (Veh)	Delay (s)	Unsignalised level of service
A - Standing Way (E)	1117	279	132	1119	1173	1519	1.8	2.6	8.790	A
B - Whaddon Road	408	102	917	400	402	335	1.6	3.7	27.161	D
C - Standing Way (W)	1455	364	196	1455	1508	1121	2.2	3.6	8.741	A

08:00 - 08:15

Arm	Total Demand (Veh/hr)	Junction Arrivals (Veh)	Circulating flow (Veh/hr)	Throughput (Veh/hr)	Average throughput (PCU/hr)	Throughput (exit side) (Veh/hr)	Start queue (Veh)	End queue (Veh)	Delay (s)	Unsignalised level of service
A - Standing Way (E)	1363	341	157	1354	1411	1821	2.6	7.7	16.911	C
B - Whaddon Road	485	121	1109	439	449	402	3.7	15.9	86.379	F
C - Standing Way (W)	1764	441	217	1761	1821	1331	3.6	10.9	19.513	C

08:15 - 08:30

Arm	Total Demand (Veh/hr)	Junction Arrivals (Veh)	Circulating flow (Veh/hr)	Throughput (Veh/hr)	Average throughput (PCU/hr)	Throughput (exit side) (Veh/hr)	Start queue (Veh)	End queue (Veh)	Delay (s)	Unsignalised level of service
A - Standing Way (E)	1363	341	156	1358	1431	1838	7.7	7.6	19.721	C
B - Whaddon Road	486	121	1111	452	458	404	15.9	26.0	176.122	F
C - Standing Way (W)	1774	443	224	1770	1844	1339	10.9	12.3	23.842	C

08:30 - 08:45

Arm	Total Demand (Veh/hr)	Junction Arrivals (Veh)	Circulating flow (Veh/hr)	Throughput (Veh/hr)	Average throughput (PCU/hr)	Throughput (exit side) (Veh/hr)	Start queue (Veh)	End queue (Veh)	Delay (s)	Unsignalised level of service
A - Standing Way (E)	1108	277	132	1108	1184	1538	7.6	2.7	10.161	B
B - Whaddon Road	402	101	908	452	483	332	26.0	8.5	116.207	F
C - Standing Way (W)	1445	361	221	1448	1549	1138	12.3	3.8	11.220	B

08:45 - 09:00

Arm	Total Demand (Veh/hr)	Junction Arrivals (Veh)	Circulating flow (Veh/hr)	Throughput (Veh/hr)	Average throughput (PCU/hr)	Throughput (exit side) (Veh/hr)	Start queue (Veh)	End queue (Veh)	Delay (s)	Unsignalised level of service
A - Standing Way (E)	935	234	110	933	987	1269	2.7	1.7	6.664	A
B - Whaddon Road	327	82	766	333	370	277	8.5	1.5	27.770	D
C - Standing Way (W)	1213	303	166	1213	1271	934	3.8	2.2	6.580	A

Lane Results

Lane Level notation: Lane Level 1 is always closest to the junction.

Lanes: Main Results for each time segment

07:30 - 07:45

Arm	Side	Lane level	Lane	Destination arms	Total Demand (Veh/hr)	Capacity (Veh/hr)	RFC	Throughput (Veh/hr)	Average throughput (PCU/hr)	Start queue (Veh)	End queue (Veh)	Delay (s)	Unsignalised level of service
A - Standing Way (E)	Entry	1	1	B	170	1024	0.166	170	172	0.0	0.2	4.190	A
			2	A, C	761	1296	0.588	761	799	0.0	1.6	7.031	A
	Exit	1	1		1272			1272	1314	0.0	0.0	0.000	A
B - Whaddon Road	Entry	1	1	C	173	395	0.438	174	176	0.0	0.7	15.436	C
			2	A, B	163	396	0.413	162	164	0.0	0.7	15.393	C
		2	1	(A, B, C)	337			337	346	0.0	0.1	0.859	A
	Exit	1	1		279			279	286	0.0	0.0	0.000	A
C - Standing Way (W)	Entry	1	1	A	591	992	0.596	591	613	0.0	1.1	6.147	A
			2	A, B, C	627	991	0.632	626	647	0.0	1.2	6.437	A
		2	1	(A, B, C)	1218			1218	1270	0.0	0.0	0.000	A
	Exit	1	1		932			932	972	0.0	0.0	0.000	A

07:45 - 08:00

Arm	Side	Lane level	Lane	Destination arms	Total Demand (Veh/hr)	Capacity (Veh/hr)	RFC	Throughput (Veh/hr)	Average throughput (PCU/hr)	Start queue (Veh)	End queue (Veh)	Delay (s)	Unsignalised level of service
A - Standing Way (E)	Entry	1	1	B	202	1019	0.198	202	206	0.2	0.2	4.445	A
			2	A, C	915	1286	0.712	917	967	1.6	2.4	9.744	A
	Exit	1	1		1519			1519	1568	0.0	0.0	0.000	A
B - Whaddon Road	Entry	1	1	C	209	342	0.610	207	209	0.7	1.4	22.305	C
			2	A, B	195	344	0.566	193	193	0.7	1.3	22.131	C
		2	1	(A, B, C)	408			404	408	0.1	0.9	4.777	A
	Exit	1	1		335			335	343	0.0	0.0	0.000	A
C - Standing Way (W)	Entry	1	1	A	719	983	0.732	719	739	1.1	1.7	8.511	A
			2	A, B, C	736	979	0.752	736	768	1.2	1.8	8.921	A
		2	1	(A, B, C)	1455			1455	1513	0.0	0.0	0.021	A
	Exit	1	1		1121			1121	1172	0.0	0.0	0.000	A

08:00 - 08:15

Arm	Side	Lane level	Lane	Destination arms	Total Demand (Veh/hr)	Capacity (Veh/hr)	RFC	Throughput (Veh/hr)	Average throughput (PCU/hr)	Start queue (Veh)	End queue (Veh)	Delay (s)	Unsignalised level of service
A - Standing Way (E)	Entry	1	1	B	245	1011	0.243	245	251	0.2	0.3	4.649	A
			2	A, C	1118	1276	0.876	1109	1160	2.4	7.4	19.610	C
	Exit	1	1		1821			1821	1878	0.0	0.0	0.000	A
B - Whaddon Road	Entry	1	1	C	229	279	0.820	226	231	1.4	2.7	36.209	E
			2	A, B	215	280	0.768	213	217	1.3	2.6	38.452	E
		2	1	(A, B, C)	485			444	459	0.9	10.6	48.366	E
	Exit	1	1		402			402	416	0.0	0.0	0.000	A
C - Standing Way (W)	Entry	1	1	A	871	976	0.893	870	900	1.7	4.8	17.654	C
			2	A, B, C	891	973	0.916	891	921	1.8	4.9	18.059	C
		2	1	(A, B, C)	1764			1763	1846	0.0	1.3	1.615	A
	Exit	1	1		1331			1331	1386	0.0	0.0	0.000	A

08:15 - 08:30

Arm	Side	Lane level	Lane	Destination arms	Total Demand (Veh/hr)	Capacity (Veh/hr)	RFC	Throughput (Veh/hr)	Average throughput (PCU/hr)	Start queue (Veh)	End queue (Veh)	Delay (s)	Unsignalised level of service
A - Standing Way (E)	Entry	1	1	B	248	1010	0.245	247	251	0.3	0.4	4.735	A
			2	A, C	1115	1275	0.874	1111	1180	7.4	7.2	23.024	C
	Exit	1	1		1838			1838	1905	0.0	0.0	0.000	A
B - Whaddon Road	Entry	1	1	C	233	278	0.839	232	236	2.7	2.7	41.572	E
			2	A, B	222	280	0.793	220	222	2.6	2.9	46.195	E
		2	1	(A, B, C)	486			455	459	10.6	20.4	132.760	F
	Exit	1	1		404			404	417	0.0	0.0	0.000	A
C - Standing Way (W)	Entry	1	1	A	882	973	0.906	882	915	4.8	4.9	19.803	C
			2	A, B, C	888	970	0.916	888	929	4.9	5.1	20.355	C
		2	1	(A, B, C)	1774			1770	1846	1.3	2.3	3.739	A
	Exit	1	1		1339			1339	1411	0.0	0.0	0.000	A

08:30 - 08:45

Arm	Side	Lane level	Lane	Destination arms	Total Demand (Veh/hr)	Capacity (Veh/hr)	RFC	Throughput (Veh/hr)	Average throughput (PCU/hr)	Start queue (Veh)	End queue (Veh)	Delay (s)	Unsignalised level of service
A - Standing Way (E)	Entry	1	1	B	201	1015	0.198	200	207	0.4	0.3	4.519	A
			2	A, C	907	1287	0.706	908	977	7.2	2.5	11.418	B
	Exit	1	1		1538			1538	1643	0.0	0.0	0.000	A
B - Whaddon Road	Entry	1	1	C	229	346	0.663	234	251	2.7	1.7	31.973	D
			2	A, B	216	348	0.619	218	232	2.9	1.7	34.145	D
		2	1	(A, B, C)	402			445	474	20.4	5.1	84.905	F
	Exit	1	1		332			332	349	0.0	0.0	0.000	A
C - Standing Way (W)	Entry	1	1	A	708	974	0.727	709	759	4.9	1.9	10.535	B
			2	A, B, C	738	971	0.760	739	790	5.1	2.0	10.823	B
		2	1	(A, B, C)	1445			1446	1523	2.3	0.0	0.667	A
	Exit	1	1		1138			1138	1224	0.0	0.0	0.000	A

08:45 - 09:00

Arm	Side	Lane level	Lane	Destination arms	Total Demand (Veh/hr)	Capacity (Veh/hr)	RFC	Throughput (Veh/hr)	Average throughput (PCU/hr)	Start queue (Veh)	End queue (Veh)	Delay (s)	Unsignalised level of service
A - Standing Way (E)	Entry	1	1	B	167	1021	0.164	167	172	0.3	0.2	4.244	A
			2	A, C	767	1296	0.592	766	815	2.5	1.5	7.194	A
	Exit	1	1		1269			1269	1337	0.0	0.0	0.000	A
B - Whaddon Road	Entry	1	1	C	170	392	0.433	170	192	1.7	0.8	18.889	C
			2	A, B	161	395	0.407	163	178	1.7	0.7	19.416	C
		2	1	(A, B, C)	327			331	363	5.1	0.1	9.535	A
	Exit	1	1		277			277	288	0.0	0.0	0.000	A
C - Standing Way (W)	Entry	1	1	A	588	992	0.593	588	616	1.9	1.0	6.416	A
			2	A, B, C	625	989	0.632	625	656	2.0	1.1	6.734	A
		2	1	(A, B, C)	1213			1213	1265	0.0	0.0	0.000	A
	Exit	1	1		934			934	1004	0.0	0.0	0.000	A

2033 Base + CD + SP (ST), PM

Data Errors and Warnings

Severity	Area	Item	Description
Warning	Lane Simulation	A1 - [Lane Simulation]	This analysis set uses Lane Simulation mode. This is provided as an investigative tool and the user should apply judgement when interpreting the results.
Warning	Geometry	C - Standing Way (W) - Roundabout Geometry	Effective flare length is over 30m, which is outside the normal range. Treat capacities with increasing caution.

Junction Network

Junctions

Junction	Name	Junction type	Use circulating lanes	Arm order	Junction Delay (s)	Junction LOS
J6	Bottledump Roundabout	Standard Roundabout		A, B, C	52.17	F

Junction Network Options

Driving side	Lighting
Left	Normal/unknown

Traffic Demand

Demand Set Details

ID	Scenario name	Time Period name	Traffic profile type	Start time (HH:mm)	Finish time (HH:mm)	Time segment length (min)	Run automatically
D22	2033 Base + CD + SP (ST)	PM	ONE HOUR	16:45	18:15	15	✓

Vehicle mix varies over turn	Vehicle mix varies over entry	Vehicle mix source	PCU Factor for a HV (PCU)
✓	✓	HV Percentages	2.00

Demand overview (Traffic)

Arm	Linked arm	Profile type	Use O-D data	Average Demand (Veh/hr)	Scaling Factor (%)
A - Standing Way (E)		ONE HOUR	✓	1441	100.000
B - Whaddon Road		ONE HOUR	✓	352	100.000
C - Standing Way (W)		ONE HOUR	✓	1348	100.000

Origin-Destination Data

Demand (Veh/hr)

		To		
		A - Standing Way (E)	B - Whaddon Road	C - Standing Way (W)
From	A - Standing Way (E)	2	230	1209
	B - Whaddon Road	190	0	162
	C - Standing Way (W)	1154	193	0

Proportions

		To		
		A - Standing Way (E)	B - Whaddon Road	C - Standing Way (W)
From	A - Standing Way (E)	0.00	0.16	0.84
	B - Whaddon Road	0.54	0.00	0.46
	C - Standing Way (W)	0.86	0.14	0.00

Vehicle Mix

Heavy Vehicle Percentages

		To		
		A - Standing Way (E)	B - Whaddon Road	C - Standing Way (W)
From	A - Standing Way (E)	50	1	2
	B - Whaddon Road	0	0	3
	C - Standing Way (W)	3	2	0

Average PCU Per Veh

		To		
		A - Standing Way (E)	B - Whaddon Road	C - Standing Way (W)
From	A - Standing Way (E)	1.500	1.010	1.018
	B - Whaddon Road	1.000	1.000	1.031
	C - Standing Way (W)	1.025	1.019	1.000

Detailed Demand Data

Demand for each time segment

Arm	Time Segment	Demand (Veh/hr)	Demand in PCU (PCU/hr)
A - Standing Way (E)	16:45-17:00	1085	1104
	17:00-17:15	1296	1319
	17:15-17:30	1587	1615
	17:30-17:45	1587	1615
	17:45-18:00	1296	1319
	18:00-18:15	1085	1104
B - Whaddon Road	16:45-17:00	265	269
	17:00-17:15	316	321
	17:15-17:30	388	393
	17:30-17:45	388	393
	17:45-18:00	316	321
	18:00-18:15	265	269
C - Standing Way (W)	16:45-17:00	1015	1039
	17:00-17:15	1212	1241
	17:15-17:30	1484	1520
	17:30-17:45	1484	1520
	17:45-18:00	1212	1241
	18:00-18:15	1015	1039

Results

Results Summary for whole modelled period

Arm	Max Delay (s)	Max Queue (Veh)	Max LOS	Average Demand (Veh/hr)	Total Junction Arrivals (Veh)
A - Standing Way (E)	77.11	38.8	F	1320	1980
B - Whaddon Road	116.68	14.1	F	322	484
C - Standing Way (W)	8.95	4.0	A	1233	1850

Main Results for each time segment

16:45 - 17:00

Arm	Total Demand (Veh/hr)	Junction Arrivals (Veh)	Circulating flow (Veh/hr)	Throughput (Veh/hr)	Average throughput (PCU/hr)	Throughput (exit side) (Veh/hr)	Start queue (Veh)	End queue (Veh)	Delay (s)	Unsignalised level of service
A - Standing Way (E)	1088	272	144	1092	1100	1017	0.0	2.3	7.692	A
B - Whaddon Road	263	66	918	263	267	319	0.0	1.3	15.658	C
C - Standing Way (W)	1018	254	142	1019	1036	1038	0.0	1.5	5.175	A

17:00 - 17:15

Arm	Total Demand (Veh/hr)	Junction Arrivals (Veh)	Circulating flow (Veh/hr)	Throughput (Veh/hr)	Average throughput (PCU/hr)	Throughput (exit side) (Veh/hr)	Start queue (Veh)	End queue (Veh)	Delay (s)	Unsignalised level of service
A - Standing Way (E)	1290	322	177	1289	1302	1215	2.3	5.1	13.002	B
B - Whaddon Road	322	81	1084	317	320	382	1.3	2.9	27.094	D
C - Standing Way (W)	1221	305	174	1219	1245	1227	1.5	2.2	6.061	A

17:15 - 17:30

Arm	Total Demand (Veh/hr)	Junction Arrivals (Veh)	Circulating flow (Veh/hr)	Throughput (Veh/hr)	Average throughput (PCU/hr)	Throughput (exit side) (Veh/hr)	Start queue (Veh)	End queue (Veh)	Delay (s)	Unsignalised level of service
A - Standing Way (E)	1564	391	216	1515	1525	1459	5.1	24.2	41.778	E
B - Whaddon Road	379	95	1265	370	364	465	2.9	8.6	65.806	F
C - Standing Way (W)	1471	368	202	1472	1510	1433	2.2	3.4	8.493	A

17:30 - 17:45

Arm	Total Demand (Veh/hr)	Junction Arrivals (Veh)	Circulating flow (Veh/hr)	Throughput (Veh/hr)	Average throughput (PCU/hr)	Throughput (exit side) (Veh/hr)	Start queue (Veh)	End queue (Veh)	Delay (s)	Unsignalised level of service
A - Standing Way (E)	1599	400	209	1547	1561	1463	24.2	38.7	77.112	F
B - Whaddon Road	383	96	1286	362	367	470	8.6	14.1	116.684	F
C - Standing Way (W)	1475	369	197	1475	1515	1451	3.4	3.9	8.946	A

17:45 - 18:00

Arm	Total Demand (Veh/hr)	Junction Arrivals (Veh)	Circulating flow (Veh/hr)	Throughput (Veh/hr)	Average throughput (PCU/hr)	Throughput (exit side) (Veh/hr)	Start queue (Veh)	End queue (Veh)	Delay (s)	Unsignalised level of service
A - Standing Way (E)	1289	322	173	1355	1439	1215	38.7	8.9	50.189	F
B - Whaddon Road	322	81	1149	341	359	378	14.1	6.1	92.491	F
C - Standing Way (W)	1197	299	189	1198	1246	1301	3.9	2.2	6.572	A

18:00 - 18:15

Arm	Total Demand (Veh/hr)	Junction Arrivals (Veh)	Circulating flow (Veh/hr)	Throughput (Veh/hr)	Average throughput (PCU/hr)	Throughput (exit side) (Veh/hr)	Start queue (Veh)	End queue (Veh)	Delay (s)	Unsignalised level of service
A - Standing Way (E)	1089	272	149	1089	1135	1015	8.9	2.4	10.491	B
B - Whaddon Road	266	67	915	271	294	323	6.1	1.1	26.315	D
C - Standing Way (W)	1016	254	146	1017	1046	1039	2.2	1.5	5.417	A

Lane Results

Lane Level notation: Lane Level 1 is always closest to the junction.

Lanes: Main Results for each time segment

16:45 - 17:00

Arm	Side	Lane level	Lane	Destination arms	Total Demand (Veh/hr)	Capacity (Veh/hr)	RFC	Throughput (Veh/hr)	Average throughput (PCU/hr)	Start queue (Veh)	End queue (Veh)	Delay (s)	Unsignalised level of service
A - Standing Way (E)	Entry	1	1	B	173	1029	0.168	174	177	0.0	0.2	4.179	A
			2	A, C	915	1331	0.687	918	924	0.0	2.2	8.365	A
	Exit	1	1		1017			1017	1033	0.0	0.0	0.000	A
B - Whaddon Road	Entry	1	1	C	123	351	0.349	122	126	0.0	0.6	15.210	C
			2	A, B	140	363	0.386	140	141	0.0	0.7	15.426	C
		2	1	(A, B, C)	263			263	272	0.0	0.0	0.320	A
	Exit	1	1		319			319	323	0.0	0.0	0.000	A
C - Standing Way (W)	Entry	1	1	A	477	1018	0.468	477	486	0.0	0.7	4.960	A
			2	A, B, C	541	1022	0.530	542	550	0.0	0.8	5.365	A
		2	1	(A, B, C)	1018			1018	1043	0.0	0.0	0.000	A
	Exit	1	1		1038			1038	1047	0.0	0.0	0.000	A

17:00 - 17:15

Arm	Side	Lane level	Lane	Destination arms	Total Demand (Veh/hr)	Capacity (Veh/hr)	RFC	Throughput (Veh/hr)	Average throughput (PCU/hr)	Start queue (Veh)	End queue (Veh)	Delay (s)	Unsignalised level of service
A - Standing Way (E)	Entry	1	1	B	205	1017	0.202	205	209	0.2	0.3	4.348	A
			2	A, C	1085	1319	0.823	1084	1093	2.2	4.8	14.657	B
	Exit	1	1		1215			1215	1240	0.0	0.0	0.000	A
B - Whaddon Road	Entry	1	1	C	148	299	0.495	145	151	0.6	1.1	21.682	C
			2	A, B	174	308	0.565	172	168	0.7	1.5	26.139	D
		2	1	(A, B, C)	322			322	325	0.0	0.4	2.910	A
	Exit	1	1		382			382	385	0.0	0.0	0.000	A
C - Standing Way (W)	Entry	1	1	A	576	1006	0.572	575	589	0.7	0.9	5.830	A
			2	A, B, C	646	1010	0.639	644	656	0.8	1.3	6.268	A
		2	1	(A, B, C)	1221			1221	1248	0.0	0.0	0.000	A
	Exit	1	1		1227			1227	1242	0.0	0.0	0.000	A

17:15 - 17:30

Arm	Side	Lane level	Lane	Destination arms	Total Demand (Veh/hr)	Capacity (Veh/hr)	RFC	Throughput (Veh/hr)	Average throughput (PCU/hr)	Start queue (Veh)	End queue (Veh)	Delay (s)	Unsignalised level of service
A - Standing Way (E)	Entry	1	1	B	249	1008	0.247	250	251	0.3	0.3	4.668	A
			2	A, C	1315	1304	1.010	1265	1273	4.8	23.9	48.738	E
	Exit	1	1		1459			1459	1490	0.0	0.0	0.000	A
B - Whaddon Road	Entry	1	1	C	171	243	0.703	170	171	1.1	1.9	35.582	E
			2	A, B	205	249	0.821	200	193	1.5	2.8	42.266	E
		2	1	(A, B, C)	379			375	373	0.4	3.9	25.903	D
	Exit	1	1		465			465	468	0.0	0.0	0.000	A
C - Standing Way (W)	Entry	1	1	A	708	998	0.710	708	729	0.9	1.6	8.154	A
			2	A, B, C	763	999	0.764	764	781	1.3	1.8	8.810	A
		2	1	(A, B, C)	1471			1471	1515	0.0	0.0	0.000	A
	Exit	1	1		1433			1433	1440	0.0	0.0	0.000	A

17:30 - 17:45

Arm	Side	Lane level	Lane	Destination arms	Total Demand (Veh/hr)	Capacity (Veh/hr)	RFC	Throughput (Veh/hr)	Average throughput (PCU/hr)	Start queue (Veh)	End queue (Veh)	Delay (s)	Unsignalised level of service
A - Standing Way (E)	Entry	1	1	B	260	1006	0.259	260	256	0.3	0.3	4.776	A
			2	A, C	1339	1304	1.027	1286	1305	23.9	38.4	90.818	F
	Exit	1	1		1463			1463	1499	0.0	0.0	0.000	A
B - Whaddon Road	Entry	1	1	C	167	234	0.711	167	171	1.9	2.0	41.028	E
			2	A, B	198	242	0.818	195	196	2.8	3.2	54.730	F
		2	1	(A, B, C)	383			364	368	3.9	9.0	68.084	F
	Exit	1	1		470			470	471	0.0	0.0	0.000	A
C - Standing Way (W)	Entry	1	1	A	712	999	0.713	712	732	1.6	1.8	8.623	A
			2	A, B, C	764	999	0.764	763	783	1.8	2.2	9.242	A
		2	1	(A, B, C)	1475			1475	1517	0.0	0.0	0.003	A
	Exit	1	1		1451			1451	1473	0.0	0.0	0.000	A

17:45 - 18:00

Arm	Side	Lane level	Lane	Destination arms	Total Demand (Veh/hr)	Capacity (Veh/hr)	RFC	Throughput (Veh/hr)	Average throughput (PCU/hr)	Start queue (Veh)	End queue (Veh)	Delay (s)	Unsignalised level of service
A - Standing Way (E)	Entry	1	1	B	206	1018	0.203	205	210	0.3	0.3	4.450	A
			2	A, C	1083	1318	0.821	1149	1229	38.4	8.6	58.923	F
	Exit	1	1		1215			1215	1266	0.0	0.0	0.000	A
B - Whaddon Road	Entry	1	1	C	152	276	0.550	154	165	2.0	1.3	35.412	E
			2	A, B	185	286	0.645	186	194	3.2	2.0	47.706	E
		2	1	(A, B, C)	322			337	351	9.0	2.8	51.420	F
	Exit	1	1		378			378	388	0.0	0.0	0.000	A
C - Standing Way (W)	Entry	1	1	A	559	1001	0.558	560	588	1.8	1.0	6.378	A
			2	A, B, C	638	1002	0.637	638	658	2.2	1.1	6.745	A
		2	1	(A, B, C)	1197			1197	1239	0.0	0.0	0.000	A
	Exit	1	1		1301			1301	1390	0.0	0.0	0.000	A

18:00 - 18:15

Arm	Side	Lane level	Lane	Destination arms	Total Demand (Veh/hr)	Capacity (Veh/hr)	RFC	Throughput (Veh/hr)	Average throughput (PCU/hr)	Start queue (Veh)	End queue (Veh)	Delay (s)	Unsignalised level of service
A - Standing Way (E)	Entry	1	1	B	174	1026	0.170	175	178	0.3	0.2	4.238	A
			2	A, C	915	1331	0.686	915	957	8.6	2.2	11.695	B
	Exit	1	1		1015			1015	1060	0.0	0.0	0.000	A
B - Whaddon Road	Entry	1	1	C	124	351	0.354	126	135	1.3	0.4	19.089	C
			2	A, B	143	364	0.393	144	159	2.0	0.6	22.645	C
		2	1	(A, B, C)	266			267	285	2.8	0.0	6.411	A
	Exit	1	1		323			323	326	0.0	0.0	0.000	A
C - Standing Way (W)	Entry	1	1	A	474	1013	0.467	473	489	1.0	0.7	5.231	A
			2	A, B, C	543	1020	0.533	544	557	1.1	0.8	5.579	A
		2	1	(A, B, C)	1016			1016	1043	0.0	0.0	0.000	A
	Exit	1	1		1039			1039	1090	0.0	0.0	0.000	A

Junctions 9

ARCADY 9 - Roundabout Module

Version: 9.5.1.7462
© Copyright TRL Limited, 2019

For sales and distribution information, program advice and maintenance, contact TRL:
+44 (0)1344 379777 software@trl.co.uk www.trlsoftware.co.uk

The users of this computer program for the solution of an engineering problem are in no way relieved of their responsibility for the correctness of the solution

Filename: J7 - Whaddon Crossroads.j9
Path: \\uk.wspgroup.com\central data\Projects\700694xx\70069442 - SWMK - 2020\03 WIP\TP Transport Planning\Incoming\iCRC\200821 - Junction and Mitigation Modelling BC Only\J7
Report generation date: 25/08/2020 16:40:58

»2020 Base, AM
»2020 Base, PM
»2033 Base, AM
»2033 Base, PM
»2033 Base + CD + D, AM
»2033 Base + CD + D, PM
»2033 Base + CD + D with TP, AM
»2033 Base + CD + D with TP, PM
»2033 Base + CD + D - ST, AM
»2033 Base + CD + D - ST, PM
»2033 Base + CD + SP (ST), AM
»2033 Base + CD + SP (ST), PM

Summary of junction performance

	AM					PM				
	Set ID	Queue (Veh)	Delay (s)	RFC	LOS	Set ID	Queue (Veh)	Delay (s)	RFC	LOS
2020 Base										
A - Coddimor Ln	D1	0.6	15.52	0.40	C	D2	0.5	12.20	0.36	B
B - A421 (East)		4.2	12.33	0.81	B		6.0	16.69	0.87	C
C - Whaddon Rd		5.6	57.65	0.88	F		3.2	41.92	0.78	E
D - A421 (West)		12.0	37.06	0.94	E		5.7	18.18	0.86	C
2033 Base										
A - Coddimor Ln	D13	1.0	20.69	0.50	C	D14	1.0	19.34	0.50	C
B - A421 (East)		14.4	37.79	0.95	E		33.8	75.12	1.01	F
C - Whaddon Rd		53.2	420.90	1.31	F		31.6	310.99	1.21	F
D - A421 (West)		61.1	140.63	1.07	F		26.6	69.39	1.00	F
2033 Base + CD + D										
A - Coddimor Ln	D15	1.0	20.73	0.50	C	D16	1.0	20.68	0.52	C
B - A421 (East)		27.8	65.17	1.00	F		55.4	111.77	1.05	F
C - Whaddon Rd		66.9	553.74	1.42	F		48.3	511.63	1.32	F
D - A421 (West)		80.8	195.70	1.10	F		44.8	104.98	1.04	F
2033 Base + CD + D with TP										
A - Coddimor Ln	D17	1.0	20.72	0.50	C	D18	1.0	20.50	0.52	C
B - A421 (East)		24.9	59.73	0.99	F		51.2	104.73	1.05	F
C - Whaddon Rd		65.0	533.07	1.41	F		44.6	467.21	1.31	F
D - A421 (West)		77.7	187.08	1.10	F		41.1	97.92	1.03	F
2033 Base + CD + D - ST										
A - Coddimor Ln	D19	1.0	20.78	0.50	C	D20	1.1	20.97	0.52	C
B - A421 (East)		38.3	83.89	1.02	F		60.8	120.72	1.06	F
C - Whaddon Rd		73.1	643.84	1.45	F		56.3	576.72	1.35	F
D - A421 (West)		86.9	210.36	1.11	F		51.5	117.75	1.05	F
2033 Base + CD + SP (ST)										
A - Coddimor Ln	D21	1.0	20.67	0.50	C	D22	1.0	19.84	0.51	C
B - A421 (East)		19.5	48.85	0.98	E		38.0	82.28	1.02	F
C - Whaddon Rd		60.1	482.85	1.37	F		36.0	350.62	1.24	F
D - A421 (West)		65.8	151.43	1.08	F		31.4	79.03	1.01	F

Values shown are the highest values encountered over all time segments. Delay is the maximum value of average delay per arriving vehicle.

File summary

File Description

Title	Whaddon Crossroads
Location	51°59'6.32"N, 0°49'39.55"W
Site number	7
Date	04/07/2020
Version	
Status	(new file)
Identifier	
Client	
Jobnumber	
Enumerator	fsuarez
Description	

Units

Distance units	Speed units	Traffic units input	Traffic units results	Flow units	Average delay units	Total delay units	Rate of delay units
m	kph	Veh	Veh	perHour	s	-Min	perMin

Analysis Options

Vehicle length (m)	Calculate Queue Percentiles	Calculate detailed queueing delay	Calculate residual capacity	RFC Threshold	Average Delay threshold (s)	Queue threshold (PCU)
5.75				0.85	36.00	20.00

Demand Set Summary

ID	Scenario name	Time Period name	Traffic profile type	Start time (HH:mm)	Finish time (HH:mm)	Time segment length (min)	Run automatically
D1	2020 Base	AM	ONE HOUR	07:30	09:00	15	✓
D2	2020 Base	PM	ONE HOUR	16:45	18:15	15	✓
D3	2026 Base	AM	ONE HOUR	07:30	09:00	15	✓
D4	2026 Base	PM	ONE HOUR	16:45	18:15	15	✓
D5	2026 Base + CD + D	AM	ONE HOUR	07:30	09:00	15	✓
D6	2026 Base + CD + D	PM	ONE HOUR	16:45	18:15	15	✓
D7	2026 Base + CD + D with TP	AM	ONE HOUR	07:30	09:00	15	✓
D8	2026 Base + CD + D with TP	PM	ONE HOUR	16:45	18:15	15	✓
D9	2026 Base + CD + D - ST	AM	ONE HOUR	07:30	09:00	15	✓
D10	2026 Base + CD + D - ST	PM	ONE HOUR	16:45	18:15	15	✓
D11	2026 Base + CD + SP (ST)	AM	ONE HOUR	07:30	09:00	15	✓
D12	2026 Base + CD + SP (ST)	PM	ONE HOUR	16:45	18:15	15	✓
D13	2033 Base	AM	ONE HOUR	07:30	09:00	15	✓
D14	2033 Base	PM	ONE HOUR	16:45	18:15	15	✓
D15	2033 Base + CD + D	AM	ONE HOUR	07:30	09:00	15	✓
D16	2033 Base + CD + D	PM	ONE HOUR	16:45	18:15	15	✓
D17	2033 Base + CD + D with TP	AM	ONE HOUR	07:30	09:00	15	✓
D18	2033 Base + CD + D with TP	PM	ONE HOUR	16:45	18:15	15	✓
D19	2033 Base + CD + D - ST	AM	ONE HOUR	07:30	09:00	15	✓
D20	2033 Base + CD + D - ST	PM	ONE HOUR	16:45	18:15	15	✓
D21	2033 Base + CD + SP (ST)	AM	ONE HOUR	07:30	09:00	15	✓
D22	2033 Base + CD + SP (ST)	PM	ONE HOUR	16:45	18:15	15	✓

Analysis Set Details

ID	Include in report	Use specific Demand Set(s)	Specific Demand Set(s)	Network flow scaling factor (%)	Network capacity scaling factor (%)
A1	✓	✓	D1,D2,D13,D14,D15,D16,D17,D18,D19,D20,D21,D22	100.000	100.000

2020 Base, AM

Data Errors and Warnings

No errors or warnings

Junction Network

Junctions

Junction	Name	Junction type	Use circulating lanes	Arm order	Junction Delay (s)	Junction LOS
J7	Whaddon Crossroads	Standard Roundabout		A, B, C, D	28.26	D

Junction Network Options

Driving side	Lighting
Left	Normal/unknown

Arms

Arms

Arm	Name	Description
A	Coddimor Ln	
B	A421 (East)	
C	Whaddon Rd	
D	A421 (West)	

Roundabout Geometry

Arm	V - Approach road half-width (m)	E - Entry width (m)	l' - Effective flare length (m)	R - Entry radius (m)	D - Inscribed circle diameter (m)	PHI - Conflict (entry) angle (deg)	Exit only
A - Coddimor Ln	2.80	6.70	8.5	21.5	50.6	40.0	
B - A421 (East)	2.90	7.70	8.6	26.3	50.6	25.5	
C - Whaddon Rd	2.90	6.10	9.0	19.7	50.6	17.0	
D - A421 (West)	3.10	7.50	12.9	28.0	50.6	32.0	

Slope / Intercept / Capacity

Arm Intercept Adjustments

Arm	Type	Reason	Direct intercept adjustment (PCU/hr)
A - Coddimor Ln	Direct		-100
B - A421 (East)	Direct		250
C - Whaddon Rd	Direct		-300
D - A421 (West)	None		

Roundabout Slope and Intercept used in model

Arm	Final slope	Final intercept (PCU/hr)
A - Coddimor Ln	0.519	1187
B - A421 (East)	0.564	1687
C - Whaddon Rd	0.560	1091
D - A421 (West)	0.587	1588

The slope and intercept shown above include any corrections and adjustments.

Traffic Demand

Demand Set Details

ID	Scenario name	Time Period name	Traffic profile type	Start time (HH:mm)	Finish time (HH:mm)	Time segment length (min)	Run automatically
D1	2020 Base	AM	ONE HOUR	07:30	09:00	15	✓

Vehicle mix varies over turn	Vehicle mix varies over entry	Vehicle mix source	PCU Factor for a HV (PCU)
✓	✓	HV Percentages	2.00

Demand overview (Traffic)

Arm	Linked arm	Profile type	Use O-D data	Average Demand (Veh/hr)	Scaling Factor (%)
A - Coddimor Ln		ONE HOUR	✓	138	100.000
B - A421 (East)		ONE HOUR	✓	1135	100.000
C - Whaddon Rd		ONE HOUR	✓	341	100.000
D - A421 (West)		ONE HOUR	✓	1131	100.000

Origin-Destination Data

Demand (Veh/hr)

		To			
		A - Coddimor Ln	B - A421 (East)	C - Whaddon Rd	D - A421 (West)
From	A - Coddimor Ln	0	46	48	44
	B - A421 (East)	28	0	185	922
	C - Whaddon Rd	43	240	0	58
	D - A421 (West)	20	1094	17	0

Proportions

		To			
		A - Coddimor Ln	B - A421 (East)	C - Whaddon Rd	D - A421 (West)
From	A - Coddimor Ln	0.00	0.33	0.35	0.32
	B - A421 (East)	0.02	0.00	0.16	0.81
	C - Whaddon Rd	0.13	0.70	0.00	0.17
	D - A421 (West)	0.02	0.97	0.02	0.00

Vehicle Mix

Heavy Vehicle Percentages

		To			
		A - Coddimor Ln	B - A421 (East)	C - Whaddon Rd	D - A421 (West)
From	A - Coddimor Ln	0	0	0	2
	B - A421 (East)	0	0	1	6
	C - Whaddon Rd	2	3	0	5
	D - A421 (West)	5	5	12	0

Average PCU Per Veh

		To			
		A - Coddimor Ln	B - A421 (East)	C - Whaddon Rd	D - A421 (West)
From	A - Coddimor Ln	1.000	1.000	1.000	1.023
	B - A421 (East)	1.000	1.000	1.011	1.060
	C - Whaddon Rd	1.023	1.033	1.000	1.050
	D - A421 (West)	1.050	1.045	1.118	1.000

Detailed Demand Data

Demand for each time segment

Time Segment	Arm	Demand (Veh/hr)	Demand in PCU (PCU/hr)
07:30-07:45	A - Coddimor Ln	104	105
	B - A421 (East)	854	898
	C - Whaddon Rd	257	266
	D - A421 (West)	851	891
07:45-08:00	A - Coddimor Ln	124	125
	B - A421 (East)	1020	1072
	C - Whaddon Rd	307	317
	D - A421 (West)	1017	1064
08:00-08:15	A - Coddimor Ln	152	153
	B - A421 (East)	1250	1313
	C - Whaddon Rd	375	388
	D - A421 (West)	1245	1303
08:15-08:30	A - Coddimor Ln	152	153
	B - A421 (East)	1250	1313
	C - Whaddon Rd	375	388
	D - A421 (West)	1245	1303
08:30-08:45	A - Coddimor Ln	124	125
	B - A421 (East)	1020	1072
	C - Whaddon Rd	307	317
	D - A421 (West)	1017	1064
08:45-09:00	A - Coddimor Ln	104	105
	B - A421 (East)	854	898
	C - Whaddon Rd	257	266
	D - A421 (West)	851	891

Results

Results Summary for whole modelled period

Arm	Max RFC	Max Delay (s)	Max Queue (Veh)	Max LOS	Average Demand (Veh/hr)	Total Junction Arrivals (Veh)
A - Coddimor Ln	0.40	15.52	0.6	C	127	190
B - A421 (East)	0.81	12.33	4.2	B	1041	1562
C - Whaddon Rd	0.88	57.65	5.6	F	313	469
D - A421 (West)	0.94	37.06	12.0	E	1038	1557

Main Results for each time segment

07:30 - 07:45

Arm	Total Demand (Veh/hr)	Junction Arrivals (Veh)	Circulating flow (Veh/hr)	Capacity (Veh/hr)	RFC	Throughput (Veh/hr)	Throughput (exit side) (Veh/hr)	Start queue (Veh)	End queue (Veh)	Delay (s)	Unsignalised level of service
A - Coddimor Ln	104	26	1009	635	0.164	103	68	0.0	0.2	6.755	A
B - A421 (East)	854	214	81	1561	0.547	850	1031	0.0	1.2	5.029	A
C - Whaddon Rd	257	64	744	629	0.408	254	187	0.0	0.7	9.534	A
D - A421 (West)	851	213	232	1384	0.615	845	766	0.0	1.6	6.608	A

07:45 - 08:00

Arm	Total Demand (Veh/hr)	Junction Arrivals (Veh)	Circulating flow (Veh/hr)	Capacity (Veh/hr)	RFC	Throughput (Veh/hr)	Throughput (exit side) (Veh/hr)	Start queue (Veh)	End queue (Veh)	Delay (s)	Unsignalised level of service
A - Coddimor Ln	124	31	1208	528	0.235	124	81	0.2	0.3	8.884	A
B - A421 (East)	1020	255	98	1552	0.657	1018	1234	1.2	1.9	6.701	A
C - Whaddon Rd	307	77	891	545	0.563	304	224	0.7	1.2	14.828	B
D - A421 (West)	1017	254	278	1358	0.749	1012	918	1.6	2.9	10.250	B

08:00 - 08:15

Arm	Total Demand (Veh/hr)	Junction Arrivals (Veh)	Circulating flow (Veh/hr)	Capacity (Veh/hr)	RFC	Throughput (Veh/hr)	Throughput (exit side) (Veh/hr)	Start queue (Veh)	End queue (Veh)	Delay (s)	Unsignalised level of service
A - Coddimor Ln	152	38	1449	398	0.381	151	98	0.3	0.6	14.466	B
B - A421 (East)	1250	312	119	1540	0.811	1241	1481	1.9	4.0	11.700	B
C - Whaddon Rd	375	94	1087	433	0.867	362	273	1.2	4.7	44.023	E
D - A421 (West)	1245	311	331	1327	0.938	1217	1118	2.9	10.0	27.361	D

08:15 - 08:30

Arm	Total Demand (Veh/hr)	Junction Arrivals (Veh)	Circulating flow (Veh/hr)	Capacity (Veh/hr)	RFC	Throughput (Veh/hr)	Throughput (exit side) (Veh/hr)	Start queue (Veh)	End queue (Veh)	Delay (s)	Unsignalised level of service
A - Coddimor Ln	152	38	1477	383	0.396	152	100	0.6	0.6	15.522	C
B - A421 (East)	1250	312	120	1540	0.812	1249	1509	4.0	4.2	12.326	B
C - Whaddon Rd	375	94	1094	429	0.876	372	275	4.7	5.6	57.654	F
D - A421 (West)	1245	311	340	1322	0.942	1237	1126	10.0	12.0	37.060	E

08:30 - 08:45

Arm	Total Demand (Veh/hr)	Junction Arrivals (Veh)	Circulating flow (Veh/hr)	Capacity (Veh/hr)	RFC	Throughput (Veh/hr)	Throughput (exit side) (Veh/hr)	Start queue (Veh)	End queue (Veh)	Delay (s)	Unsignalised level of service
A - Coddimor Ln	124	31	1261	500	0.248	125	85	0.6	0.3	9.644	A
B - A421 (East)	1020	255	99	1551	0.658	1029	1287	4.2	2.0	7.009	A
C - Whaddon Rd	307	77	901	539	0.569	323	227	5.6	1.4	17.887	C
D - A421 (West)	1017	254	294	1348	0.754	1052	931	12.0	3.2	13.451	B

08:45 - 09:00

Arm	Total Demand (Veh/hr)	Junction Arrivals (Veh)	Circulating flow (Veh/hr)	Capacity (Veh/hr)	RFC	Throughput (Veh/hr)	Throughput (exit side) (Veh/hr)	Start queue (Veh)	End queue (Veh)	Delay (s)	Unsignalised level of service
A - Coddimor Ln	104	26	1025	627	0.166	104	69	0.3	0.2	6.900	A
B - A421 (East)	854	214	83	1560	0.548	857	1047	2.0	1.2	5.144	A
C - Whaddon Rd	257	64	751	625	0.411	259	189	1.4	0.7	9.914	A
D - A421 (West)	851	213	236	1381	0.616	858	774	3.2	1.6	6.958	A

2020 Base, PM

Data Errors and Warnings

No errors or warnings

Junction Network

Junctions

Junction	Name	Junction type	Use circulating lanes	Arm order	Junction Delay (s)	Junction LOS
J7	Whaddon Crossroads	Standard Roundabout		A, B, C, D	19.49	C

Junction Network Options

Driving side	Lighting
Left	Normal/unknown

Traffic Demand

Demand Set Details

ID	Scenario name	Time Period name	Traffic profile type	Start time (HH:mm)	Finish time (HH:mm)	Time segment length (min)	Run automatically
D2	2020 Base	PM	ONE HOUR	16:45	18:15	15	✓

Vehicle mix varies over turn	Vehicle mix varies over entry	Vehicle mix source	PCU Factor for a HV (PCU)
✓	✓	HV Percentages	2.00

Demand overview (Traffic)

Arm	Linked arm	Profile type	Use O-D data	Average Demand (Veh/hr)	Scaling Factor (%)
A - Coddimor Ln		ONE HOUR	✓	148	100.000
B - A421 (East)		ONE HOUR	✓	1230	100.000
C - Whaddon Rd		ONE HOUR	✓	270	100.000
D - A421 (West)		ONE HOUR	✓	1078	100.000

Origin-Destination Data

Demand (Veh/hr)

		To			
		A - Coddimor Ln	B - A421 (East)	C - Whaddon Rd	D - A421 (West)
From	A - Coddimor Ln	0	28	46	74
	B - A421 (East)	21	1	169	1039
	C - Whaddon Rd	44	195	0	31
	D - A421 (West)	27	1023	28	0

Proportions

		To			
		A - Coddimor Ln	B - A421 (East)	C - Whaddon Rd	D - A421 (West)
From	A - Coddimor Ln	0.00	0.19	0.31	0.50
	B - A421 (East)	0.02	0.00	0.14	0.84
	C - Whaddon Rd	0.16	0.72	0.00	0.11
	D - A421 (West)	0.03	0.95	0.03	0.00

Vehicle Mix

Heavy Vehicle Percentages

		To			
		A - Coddimor Ln	B - A421 (East)	C - Whaddon Rd	D - A421 (West)
From	A - Coddimor Ln	0	0	0	0
	B - A421 (East)	5	0	1	2
	C - Whaddon Rd	0	0	0	0
	D - A421 (West)	0	3	4	0

Average PCU Per Veh

		To			
		A - Coddimor Ln	B - A421 (East)	C - Whaddon Rd	D - A421 (West)
From	A - Coddimor Ln	1.000	1.000	1.000	1.000
	B - A421 (East)	1.048	1.000	1.012	1.019
	C - Whaddon Rd	1.000	1.000	1.000	1.000
	D - A421 (West)	1.000	1.029	1.036	1.000

Detailed Demand Data

Demand for each time segment

Time Segment	Arm	Demand (Veh/hr)	Demand in PCU (PCU/hr)
16:45-17:00	A - Coddimor Ln	111	111
	B - A421 (East)	926	943
	C - Whaddon Rd	203	203
	D - A421 (West)	812	835
17:00-17:15	A - Coddimor Ln	133	133
	B - A421 (East)	1106	1126
	C - Whaddon Rd	243	243
	D - A421 (West)	969	997
17:15-17:30	A - Coddimor Ln	163	163
	B - A421 (East)	1354	1379
	C - Whaddon Rd	297	297
	D - A421 (West)	1187	1221
17:30-17:45	A - Coddimor Ln	163	163
	B - A421 (East)	1354	1379
	C - Whaddon Rd	297	297
	D - A421 (West)	1187	1221
17:45-18:00	A - Coddimor Ln	133	133
	B - A421 (East)	1106	1126
	C - Whaddon Rd	243	243
	D - A421 (West)	969	997
18:00-18:15	A - Coddimor Ln	111	111
	B - A421 (East)	926	943
	C - Whaddon Rd	203	203
	D - A421 (West)	812	835

Results

Results Summary for whole modelled period

Arm	Max RFC	Max Delay (s)	Max Queue (Veh)	Max LOS	Average Demand (Veh/hr)	Total Junction Arrivals (Veh)
A - Coddimor Ln	0.36	12.20	0.5	B	136	204
B - A421 (East)	0.87	16.69	6.0	C	1129	1693
C - Whaddon Rd	0.78	41.92	3.2	E	248	372
D - A421 (West)	0.86	18.18	5.7	C	989	1484

Main Results for each time segment

16:45 - 17:00

Arm	Total Demand (Veh/hr)	Junction Arrivals (Veh)	Circulating flow (Veh/hr)	Capacity (Veh/hr)	RFC	Throughput (Veh/hr)	Throughput (exit side) (Veh/hr)	Start queue (Veh)	End queue (Veh)	Delay (s)	Unsignalised level of service
A - Coddimor Ln	111	28	932	691	0.161	111	69	0.0	0.2	6.198	A
B - A421 (East)	926	232	111	1595	0.581	921	932	0.0	1.4	5.299	A
C - Whaddon Rd	203	51	849	607	0.335	201	182	0.0	0.5	8.838	A
D - A421 (West)	812	203	195	1432	0.567	806	856	0.0	1.3	5.704	A

17:00 - 17:15

Arm	Total Demand (Veh/hr)	Junction Arrivals (Veh)	Circulating flow (Veh/hr)	Capacity (Veh/hr)	RFC	Throughput (Veh/hr)	Throughput (exit side) (Veh/hr)	Start queue (Veh)	End queue (Veh)	Delay (s)	Unsignalised level of service
A - Coddimor Ln	133	33	1117	593	0.224	133	82	0.2	0.3	7.818	A
B - A421 (East)	1106	276	133	1582	0.699	1102	1117	1.4	2.3	7.440	A
C - Whaddon Rd	243	61	1017	511	0.475	241	218	0.5	0.9	13.266	B
D - A421 (West)	969	242	233	1410	0.687	966	1025	1.3	2.1	8.034	A

17:15 - 17:30

Arm	Total Demand (Veh/hr)	Junction Arrivals (Veh)	Circulating flow (Veh/hr)	Capacity (Veh/hr)	RFC	Throughput (Veh/hr)	Throughput (exit side) (Veh/hr)	Start queue (Veh)	End queue (Veh)	Delay (s)	Unsignalised level of service
A - Coddimor Ln	163	41	1355	466	0.350	162	99	0.3	0.5	11.797	B
B - A421 (East)	1354	339	162	1566	0.865	1341	1355	2.3	5.7	15.105	C
C - Whaddon Rd	297	74	1237	385	0.772	289	265	0.9	2.9	34.967	D
D - A421 (West)	1187	297	280	1384	0.858	1174	1247	2.1	5.4	16.256	C

17:30 - 17:45

Arm	Total Demand (Veh/hr)	Junction Arrivals (Veh)	Circulating flow (Veh/hr)	Capacity (Veh/hr)	RFC	Throughput (Veh/hr)	Throughput (exit side) (Veh/hr)	Start queue (Veh)	End queue (Veh)	Delay (s)	Unsignalised level of service
A - Coddimor Ln	163	41	1371	458	0.356	163	101	0.5	0.5	12.203	B
B - A421 (East)	1354	339	163	1566	0.865	1353	1371	5.7	6.0	16.687	C
C - Whaddon Rd	297	74	1249	379	0.785	296	267	2.9	3.2	41.921	E
D - A421 (West)	1187	297	286	1380	0.860	1185	1258	5.4	5.7	18.180	C

17:45 - 18:00

Arm	Total Demand (Veh/hr)	Junction Arrivals (Veh)	Circulating flow (Veh/hr)	Capacity (Veh/hr)	RFC	Throughput (Veh/hr)	Throughput (exit side) (Veh/hr)	Start queue (Veh)	End queue (Veh)	Delay (s)	Unsignalised level of service
A - Coddimor Ln	133	33	1141	580	0.229	134	85	0.5	0.3	8.091	A
B - A421 (East)	1106	276	134	1581	0.699	1120	1141	6.0	2.4	8.038	A
C - Whaddon Rd	243	61	1033	502	0.484	252	221	3.2	1.0	14.902	B
D - A421 (West)	969	242	243	1405	0.690	983	1042	5.7	2.3	8.796	A

18:00 - 18:15

Arm	Total Demand (Veh/hr)	Junction Arrivals (Veh)	Circulating flow (Veh/hr)	Capacity (Veh/hr)	RFC	Throughput (Veh/hr)	Throughput (exit side) (Veh/hr)	Start queue (Veh)	End queue (Veh)	Delay (s)	Unsignalised level of service
A - Coddimor Ln	111	28	944	685	0.163	112	70	0.3	0.2	6.288	A
B - A421 (East)	926	232	112	1594	0.581	930	944	2.4	1.4	5.452	A
C - Whaddon Rd	203	51	858	602	0.338	205	184	1.0	0.5	9.115	A
D - A421 (West)	812	203	198	1430	0.567	815	865	2.3	1.3	5.891	A

2033 Base, AM

Data Errors and Warnings

No errors or warnings

Junction Network

Junctions

Junction	Name	Junction type	Use circulating lanes	Arm order	Junction Delay (s)	Junction LOS
J7	Whaddon Crossroads	Standard Roundabout		A, B, C, D	126.15	F

Junction Network Options

Driving side	Lighting
Left	Normal/unknown

Traffic Demand

Demand Set Details

ID	Scenario name	Time Period name	Traffic profile type	Start time (HH:mm)	Finish time (HH:mm)	Time segment length (min)	Run automatically
D13	2033 Base	AM	ONE HOUR	07:30	09:00	15	✓

Vehicle mix varies over turn	Vehicle mix varies over entry	Vehicle mix source	PCU Factor for a HV (PCU)
✓	✓	HV Percentages	2.00

Demand overview (Traffic)

Arm	Linked arm	Profile type	Use O-D data	Average Demand (Veh/hr)	Scaling Factor (%)
A - Coddimor Ln		ONE HOUR	✓	158	100.000
B - A421 (East)		ONE HOUR	✓	1327	100.000
C - Whaddon Rd		ONE HOUR	✓	394	100.000
D - A421 (West)		ONE HOUR	✓	1302	100.000

Origin-Destination Data

Demand (Veh/hr)

		To			
		A - Coddimor Ln	B - A421 (East)	C - Whaddon Rd	D - A421 (West)
From	A - Coddimor Ln	0	53	55	50
	B - A421 (East)	32	0	221	1074
	C - Whaddon Rd	49	278	0	67
	D - A421 (West)	23	1260	19	0

Proportions

		To			
		A - Coddimor Ln	B - A421 (East)	C - Whaddon Rd	D - A421 (West)
From	A - Coddimor Ln	0.00	0.33	0.35	0.32
	B - A421 (East)	0.02	0.00	0.17	0.81
	C - Whaddon Rd	0.13	0.71	0.00	0.17
	D - A421 (West)	0.02	0.97	0.01	0.00

Vehicle Mix

Heavy Vehicle Percentages

		To			
		A - Coddimor Ln	B - A421 (East)	C - Whaddon Rd	D - A421 (West)
From	A - Coddimor Ln	0	0	0	2
	B - A421 (East)	0	0	1	6
	C - Whaddon Rd	2	3	0	5
	D - A421 (West)	5	4	12	0

Average PCU Per Veh

		To			
		A - Coddimor Ln	B - A421 (East)	C - Whaddon Rd	D - A421 (West)
From	A - Coddimor Ln	1.000	1.000	1.000	1.023
	B - A421 (East)	1.000	1.000	1.011	1.060
	C - Whaddon Rd	1.023	1.033	1.000	1.052
	D - A421 (West)	1.050	1.045	1.118	1.000

Detailed Demand Data

Demand for each time segment

Time Segment	Arm	Demand (Veh/hr)	Demand in PCU (PCU/hr)
07:30-07:45	A - Coddimor Ln	119	120
	B - A421 (East)	999	1049
	C - Whaddon Rd	297	307
	D - A421 (West)	981	1026
07:45-08:00	A - Coddimor Ln	142	143
	B - A421 (East)	1193	1252
	C - Whaddon Rd	354	367
	D - A421 (West)	1171	1225
08:00-08:15	A - Coddimor Ln	174	176
	B - A421 (East)	1461	1534
	C - Whaddon Rd	434	449
	D - A421 (West)	1434	1500
08:15-08:30	A - Coddimor Ln	174	176
	B - A421 (East)	1461	1534
	C - Whaddon Rd	434	449
	D - A421 (West)	1434	1500
08:30-08:45	A - Coddimor Ln	142	143
	B - A421 (East)	1193	1252
	C - Whaddon Rd	354	367
	D - A421 (West)	1171	1225
08:45-09:00	A - Coddimor Ln	119	120
	B - A421 (East)	999	1049
	C - Whaddon Rd	297	307
	D - A421 (West)	981	1026

Results

Results Summary for whole modelled period

Arm	Max RFC	Max Delay (s)	Max Queue (Veh)	Max LOS	Average Demand (Veh/hr)	Total Junction Arrivals (Veh)
A - Coddimor Ln	0.50	20.69	1.0	C	145	218
B - A421 (East)	0.95	37.79	14.4	E	1217	1826
C - Whaddon Rd	1.31	420.90	53.2	F	361	542
D - A421 (West)	1.07	140.63	61.1	F	1195	1793

Main Results for each time segment

07:30 - 07:45

Arm	Total Demand (Veh/hr)	Junction Arrivals (Veh)	Circulating flow (Veh/hr)	Capacity (Veh/hr)	RFC	Throughput (Veh/hr)	Throughput (exit side) (Veh/hr)	Start queue (Veh)	End queue (Veh)	Delay (s)	Unsignalised level of service
A - Coddimor Ln	119	30	1160	554	0.215	118	78	0.0	0.3	8.232	A
B - A421 (East)	999	250	93	1555	0.642	992	1185	0.0	1.8	6.314	A
C - Whaddon Rd	297	74	864	560	0.530	292	221	0.0	1.1	13.238	B
D - A421 (West)	981	245	267	1364	0.719	971	890	0.0	2.5	8.943	A

07:45 - 08:00

Arm	Total Demand (Veh/hr)	Junction Arrivals (Veh)	Circulating flow (Veh/hr)	Capacity (Veh/hr)	RFC	Throughput (Veh/hr)	Throughput (exit side) (Veh/hr)	Start queue (Veh)	End queue (Veh)	Delay (s)	Unsignalised level of service
A - Coddimor Ln	142	36	1381	435	0.327	141	93	0.3	0.5	12.212	B
B - A421 (East)	1193	298	112	1545	0.772	1187	1411	1.8	3.2	9.887	A
C - Whaddon Rd	354	89	1034	463	0.765	347	264	1.1	2.9	29.448	D
D - A421 (West)	1171	293	317	1335	0.877	1156	1064	2.5	6.1	18.747	C

08:00 - 08:15

Arm	Total Demand (Veh/hr)	Junction Arrivals (Veh)	Circulating flow (Veh/hr)	Capacity (Veh/hr)	RFC	Throughput (Veh/hr)	Throughput (exit side) (Veh/hr)	Start queue (Veh)	End queue (Veh)	Delay (s)	Unsignalised level of service
A - Coddimor Ln	174	44	1528	356	0.490	172	100	0.5	0.9	19.428	C
B - A421 (East)	1461	365	135	1532	0.953	1426	1566	3.2	12.0	27.446	D
C - Whaddon Rd	434	108	1243	343	1.263	336	317	2.9	27.3	186.038	F
D - A421 (West)	1434	359	314	1337	1.073	1314	1266	6.1	36.1	69.279	F

08:15 - 08:30

Arm	Total Demand (Veh/hr)	Junction Arrivals (Veh)	Circulating flow (Veh/hr)	Capacity (Veh/hr)	RFC	Throughput (Veh/hr)	Throughput (exit side) (Veh/hr)	Start queue (Veh)	End queue (Veh)	Delay (s)	Unsignalised level of service
A - Coddimor Ln	174	44	1544	348	0.501	174	100	0.9	1.0	20.688	C
B - A421 (East)	1461	365	136	1532	0.954	1451	1582	12.0	14.4	37.793	E
C - Whaddon Rd	434	108	1265	331	1.311	330	322	27.3	53.2	420.900	F
D - A421 (West)	1434	359	309	1340	1.070	1334	1286	36.1	61.1	140.632	F

08:30 - 08:45

Arm	Total Demand (Veh/hr)	Junction Arrivals (Veh)	Circulating flow (Veh/hr)	Capacity (Veh/hr)	RFC	Throughput (Veh/hr)	Throughput (exit side) (Veh/hr)	Start queue (Veh)	End queue (Veh)	Delay (s)	Unsignalised level of service
A - Coddimor Ln	142	36	1555	342	0.416	143	106	1.0	0.7	18.203	C
B - A421 (East)	1193	298	115	1543	0.773	1236	1584	14.4	3.6	13.213	B
C - Whaddon Rd	354	89	1076	439	0.807	431	275	53.2	34.0	355.953	F
D - A421 (West)	1171	293	388	1294	0.905	1273	1119	61.1	35.5	138.904	F

08:45 - 09:00

Arm	Total Demand (Veh/hr)	Junction Arrivals (Veh)	Circulating flow (Veh/hr)	Capacity (Veh/hr)	RFC	Throughput (Veh/hr)	Throughput (exit side) (Veh/hr)	Start queue (Veh)	End queue (Veh)	Delay (s)	Unsignalised level of service
A - Coddimor Ln	119	30	1392	430	0.277	121	97	0.7	0.4	11.681	B
B - A421 (East)	999	250	97	1553	0.643	1006	1415	3.6	1.8	6.662	A
C - Whaddon Rd	297	74	877	553	0.536	428	226	34.0	1.2	64.534	F
D - A421 (West)	981	245	380	1299	0.755	1109	925	35.5	3.3	31.086	D

2033 Base, PM

Data Errors and Warnings

No errors or warnings

Junction Network

Junctions

Junction	Name	Junction type	Use circulating lanes	Arm order	Junction Delay (s)	Junction LOS
J7	Whaddon Crossroads	Standard Roundabout		A, B, C, D	92.77	F

Junction Network Options

Driving side	Lighting
Left	Normal/unknown

Traffic Demand

Demand Set Details

ID	Scenario name	Time Period name	Traffic profile type	Start time (HH:mm)	Finish time (HH:mm)	Time segment length (min)	Run automatically
D14	2033 Base	PM	ONE HOUR	16:45	18:15	15	✓

Vehicle mix varies over turn	Vehicle mix varies over entry	Vehicle mix source	PCU Factor for a HV (PCU)
✓	✓	HV Percentages	2.00

Demand overview (Traffic)

Arm	Linked arm	Profile type	Use O-D data	Average Demand (Veh/hr)	Scaling Factor (%)
A - Coddimor Ln		ONE HOUR	✓	171	100.000
B - A421 (East)		ONE HOUR	✓	1429	100.000
C - Whaddon Rd		ONE HOUR	✓	314	100.000
D - A421 (West)		ONE HOUR	✓	1258	100.000

Origin-Destination Data

Demand (Veh/hr)

		To			
		A - Coddimor Ln	B - A421 (East)	C - Whaddon Rd	D - A421 (West)
From	A - Coddimor Ln	0	32	53	85
	B - A421 (East)	24	1	198	1205
	C - Whaddon Rd	51	227	0	36
	D - A421 (West)	31	1194	32	0

Proportions

		To			
		A - Coddimor Ln	B - A421 (East)	C - Whaddon Rd	D - A421 (West)
From	A - Coddimor Ln	0.00	0.19	0.31	0.50
	B - A421 (East)	0.02	0.00	0.14	0.84
	C - Whaddon Rd	0.16	0.72	0.00	0.11
	D - A421 (West)	0.02	0.95	0.03	0.00

Vehicle Mix

Heavy Vehicle Percentages

		To			
		A - Coddimor Ln	B - A421 (East)	C - Whaddon Rd	D - A421 (West)
From	A - Coddimor Ln	0	0	0	0
	B - A421 (East)	5	0	1	2
	C - Whaddon Rd	0	0	0	0
	D - A421 (West)	0	3	4	0

Average PCU Per Veh

		To			
		A - Coddimor Ln	B - A421 (East)	C - Whaddon Rd	D - A421 (West)
From	A - Coddimor Ln	1.000	1.000	1.000	1.000
	B - A421 (East)	1.048	1.000	1.012	1.019
	C - Whaddon Rd	1.000	1.000	1.000	1.000
	D - A421 (West)	1.000	1.029	1.036	1.000

Detailed Demand Data

Demand for each time segment

Time Segment	Arm	Demand (Veh/hr)	Demand in PCU (PCU/hr)
16:45-17:00	A - Coddimor Ln	129	129
	B - A421 (East)	1076	1096
	C - Whaddon Rd	236	236
	D - A421 (West)	947	974
17:00-17:15	A - Coddimor Ln	154	154
	B - A421 (East)	1285	1309
	C - Whaddon Rd	282	282
	D - A421 (West)	1131	1163
17:15-17:30	A - Coddimor Ln	188	188
	B - A421 (East)	1574	1603
	C - Whaddon Rd	346	346
	D - A421 (West)	1385	1425
17:30-17:45	A - Coddimor Ln	188	188
	B - A421 (East)	1574	1603
	C - Whaddon Rd	346	346
	D - A421 (West)	1385	1425
17:45-18:00	A - Coddimor Ln	154	154
	B - A421 (East)	1285	1309
	C - Whaddon Rd	282	282
	D - A421 (West)	1131	1163
18:00-18:15	A - Coddimor Ln	129	129
	B - A421 (East)	1076	1096
	C - Whaddon Rd	236	236
	D - A421 (West)	947	974

Results

Results Summary for whole modelled period

Arm	Max RFC	Max Delay (s)	Max Queue (Veh)	Max LOS	Average Demand (Veh/hr)	Total Junction Arrivals (Veh)
A - Coddimor Ln	0.50	19.34	1.0	C	157	235
B - A421 (East)	1.01	75.12	33.8	F	1311	1967
C - Whaddon Rd	1.21	310.99	31.6	F	288	432
D - A421 (West)	1.00	69.39	26.6	F	1154	1731

Main Results for each time segment

16:45 - 17:00

Arm	Total Demand (Veh/hr)	Junction Arrivals (Veh)	Circulating flow (Veh/hr)	Capacity (Veh/hr)	RFC	Throughput (Veh/hr)	Throughput (exit side) (Veh/hr)	Start queue (Veh)	End queue (Veh)	Delay (s)	Unsignalised level of service
A - Coddimor Ln	129	32	1085	609	0.211	128	79	0.0	0.3	7.456	A
B - A421 (East)	1076	269	128	1585	0.679	1068	1085	0.0	2.1	6.856	A
C - Whaddon Rd	236	59	983	530	0.446	233	212	0.0	0.8	12.001	B
D - A421 (West)	947	237	226	1414	0.669	939	991	0.0	2.0	7.455	A

17:00 - 17:15

Arm	Total Demand (Veh/hr)	Junction Arrivals (Veh)	Circulating flow (Veh/hr)	Capacity (Veh/hr)	RFC	Throughput (Veh/hr)	Throughput (exit side) (Veh/hr)	Start queue (Veh)	End queue (Veh)	Delay (s)	Unsignalised level of service
A - Coddimor Ln	154	38	1297	497	0.309	153	94	0.3	0.4	10.445	B
B - A421 (East)	1285	321	153	1571	0.818	1276	1297	2.1	4.2	11.881	B
C - Whaddon Rd	282	71	1176	420	0.671	278	254	0.8	1.9	24.510	C
D - A421 (West)	1131	283	269	1390	0.814	1122	1185	2.0	4.1	13.068	B

17:15 - 17:30

Arm	Total Demand (Veh/hr)	Junction Arrivals (Veh)	Circulating flow (Veh/hr)	Capacity (Veh/hr)	RFC	Throughput (Veh/hr)	Throughput (exit side) (Veh/hr)	Start queue (Veh)	End queue (Veh)	Delay (s)	Unsignalised level of service
A - Coddimor Ln	188	47	1502	387	0.486	186	105	0.4	0.9	17.740	C
B - A421 (East)	1574	393	185	1553	1.013	1500	1503	4.2	22.7	42.552	E
C - Whaddon Rd	346	86	1385	301	1.147	288	300	1.9	16.3	140.552	F
D - A421 (West)	1385	346	282	1382	1.002	1325	1391	4.1	19.0	41.998	E

17:30 - 17:45

Arm	Total Demand (Veh/hr)	Junction Arrivals (Veh)	Circulating flow (Veh/hr)	Capacity (Veh/hr)	RFC	Throughput (Veh/hr)	Throughput (exit side) (Veh/hr)	Start queue (Veh)	End queue (Veh)	Delay (s)	Unsignalised level of service
A - Coddimor Ln	188	47	1528	373	0.504	188	105	0.9	1.0	19.338	C
B - A421 (East)	1574	393	187	1552	1.014	1529	1528	22.7	33.8	75.121	F
C - Whaddon Rd	346	86	1411	286	1.207	284	305	16.3	31.6	310.994	F
D - A421 (West)	1385	346	279	1384	1.001	1354	1416	19.0	26.6	69.394	F

17:45 - 18:00

Arm	Total Demand (Veh/hr)	Junction Arrivals (Veh)	Circulating flow (Veh/hr)	Capacity (Veh/hr)	RFC	Throughput (Veh/hr)	Throughput (exit side) (Veh/hr)	Start queue (Veh)	End queue (Veh)	Delay (s)	Unsignalised level of service
A - Coddimor Ln	154	38	1437	423	0.363	155	110	1.0	0.6	13.540	B
B - A421 (East)	1285	321	157	1569	0.819	1400	1435	33.8	5.0	31.425	D
C - Whaddon Rd	282	71	1283	359	0.786	348	274	31.6	15.2	243.341	F
D - A421 (West)	1131	283	333	1353	0.836	1214	1298	26.6	5.8	34.425	D

18:00 - 18:15

Arm	Total Demand (Veh/hr)	Junction Arrivals (Veh)	Circulating flow (Veh/hr)	Capacity (Veh/hr)	RFC	Throughput (Veh/hr)	Throughput (exit side) (Veh/hr)	Start queue (Veh)	End queue (Veh)	Delay (s)	Unsignalised level of service
A - Coddimor Ln	129	32	1151	575	0.224	130	90	0.6	0.3	8.106	A
B - A421 (East)	1076	269	130	1584	0.679	1087	1151	5.0	2.2	7.412	A
C - Whaddon Rd	236	59	1001	520	0.455	294	216	15.2	0.9	20.283	C
D - A421 (West)	947	237	279	1384	0.684	961	1015	5.8	2.2	8.792	A

2033 Base + CD + D, AM

Data Errors and Warnings

No errors or warnings

Junction Network

Junctions

Junction	Name	Junction type	Use circulating lanes	Arm order	Junction Delay (s)	Junction LOS
J7	Whaddon Crossroads	Standard Roundabout		A, B, C, D	175.43	F

Junction Network Options

Driving side	Lighting
Left	Normal/unknown

Traffic Demand

Demand Set Details

ID	Scenario name	Time Period name	Traffic profile type	Start time (HH:mm)	Finish time (HH:mm)	Time segment length (min)	Run automatically
D15	2033 Base + CD + D	AM	ONE HOUR	07:30	09:00	15	✓

Vehicle mix varies over turn	Vehicle mix varies over entry	Vehicle mix source	PCU Factor for a HV (PCU)
✓	✓	HV Percentages	2.00

Demand overview (Traffic)

Arm	Linked arm	Profile type	Use O-D data	Average Demand (Veh/hr)	Scaling Factor (%)
A - Coddimor Ln		ONE HOUR	✓	158	100.000
B - A421 (East)		ONE HOUR	✓	1393	100.000
C - Whaddon Rd		ONE HOUR	✓	402	100.000
D - A421 (West)		ONE HOUR	✓	1347	100.000

Origin-Destination Data

Demand (Veh/hr)

		To			
		A - Coddimor Ln	B - A421 (East)	C - Whaddon Rd	D - A421 (West)
From	A - Coddimor Ln	0	53	55	50
	B - A421 (East)	32	0	238	1122
	C - Whaddon Rd	49	286	0	67
	D - A421 (West)	23	1305	19	0

Proportions

		To			
		A - Coddimor Ln	B - A421 (East)	C - Whaddon Rd	D - A421 (West)
From	A - Coddimor Ln	0.00	0.33	0.35	0.32
	B - A421 (East)	0.02	0.00	0.17	0.81
	C - Whaddon Rd	0.12	0.71	0.00	0.17
	D - A421 (West)	0.02	0.97	0.01	0.00

Vehicle Mix

Heavy Vehicle Percentages

		To			
		A - Coddimor Ln	B - A421 (East)	C - Whaddon Rd	D - A421 (West)
From	A - Coddimor Ln	0	0	0	2
	B - A421 (East)	0	0	1	6
	C - Whaddon Rd	2	3	0	5
	D - A421 (West)	5	4	12	0

Average PCU Per Veh

		To			
		A - Coddimor Ln	B - A421 (East)	C - Whaddon Rd	D - A421 (West)
From	A - Coddimor Ln	1.000	1.000	1.000	1.023
	B - A421 (East)	1.000	1.000	1.011	1.060
	C - Whaddon Rd	1.023	1.033	1.000	1.052
	D - A421 (West)	1.050	1.045	1.118	1.000

Detailed Demand Data

Demand for each time segment

Time Segment	Arm	Demand (Veh/hr)	Demand in PCU (PCU/hr)
07:30-07:45	A - Coddimor Ln	119	120
	B - A421 (East)	1049	1101
	C - Whaddon Rd	302	313
	D - A421 (West)	1014	1061
07:45-08:00	A - Coddimor Ln	142	143
	B - A421 (East)	1252	1315
	C - Whaddon Rd	361	374
	D - A421 (West)	1211	1267
08:00-08:15	A - Coddimor Ln	174	176
	B - A421 (East)	1533	1610
	C - Whaddon Rd	442	458
	D - A421 (West)	1483	1551
08:15-08:30	A - Coddimor Ln	174	176
	B - A421 (East)	1533	1610
	C - Whaddon Rd	442	458
	D - A421 (West)	1483	1551
08:30-08:45	A - Coddimor Ln	142	143
	B - A421 (East)	1252	1315
	C - Whaddon Rd	361	374
	D - A421 (West)	1211	1267
08:45-09:00	A - Coddimor Ln	119	120
	B - A421 (East)	1049	1101
	C - Whaddon Rd	302	313
	D - A421 (West)	1014	1061

Results

Results Summary for whole modelled period

Arm	Max RFC	Max Delay (s)	Max Queue (Veh)	Max LOS	Average Demand (Veh/hr)	Total Junction Arrivals (Veh)
A - Coddimor Ln	0.50	20.73	1.0	C	145	218
B - A421 (East)	1.00	65.17	27.8	F	1278	1917
C - Whaddon Rd	1.42	553.74	66.9	F	369	553
D - A421 (West)	1.10	195.70	80.8	F	1236	1854

Main Results for each time segment

07:30 - 07:45

Arm	Total Demand (Veh/hr)	Junction Arrivals (Veh)	Circulating flow (Veh/hr)	Capacity (Veh/hr)	RFC	Throughput (Veh/hr)	Throughput (exit side) (Veh/hr)	Start queue (Veh)	End queue (Veh)	Delay (s)	Unsignalised level of service
A - Coddimor Ln	119	30	1198	534	0.223	118	78	0.0	0.3	8.633	A
B - A421 (East)	1049	262	93	1555	0.674	1040	1223	0.0	2.0	6.888	A
C - Whaddon Rd	302	76	900	540	0.560	298	234	0.0	1.2	14.594	B
D - A421 (West)	1014	254	272	1361	0.745	1003	925	0.0	2.8	9.777	A

07:45 - 08:00

Arm	Total Demand (Veh/hr)	Junction Arrivals (Veh)	Circulating flow (Veh/hr)	Capacity (Veh/hr)	RFC	Throughput (Veh/hr)	Throughput (exit side) (Veh/hr)	Start queue (Veh)	End queue (Veh)	Delay (s)	Unsignalised level of service
A - Coddimor Ln	142	36	1421	414	0.344	141	92	0.3	0.5	13.157	B
B - A421 (East)	1252	313	111	1545	0.810	1244	1450	2.0	4.0	11.647	B
C - Whaddon Rd	361	90	1076	439	0.823	351	279	1.2	3.8	37.388	E
D - A421 (West)	1211	303	322	1332	0.909	1191	1106	2.8	7.8	22.744	C

08:00 - 08:15

Arm	Total Demand (Veh/hr)	Junction Arrivals (Veh)	Circulating flow (Veh/hr)	Capacity (Veh/hr)	RFC	Throughput (Veh/hr)	Throughput (exit side) (Veh/hr)	Start queue (Veh)	End queue (Veh)	Delay (s)	Unsignalised level of service
A - Coddimor Ln	174	44	1535	352	0.495	173	96	0.5	0.9	19.833	C
B - A421 (East)	1533	383	134	1533	1.000	1471	1573	4.0	19.7	39.028	E
C - Whaddon Rd	442	111	1274	326	1.358	321	331	3.8	34.0	237.864	F
D - A421 (West)	1483	371	302	1344	1.104	1329	1293	7.8	46.4	84.517	F

08:15 - 08:30

Arm	Total Demand (Veh/hr)	Junction Arrivals (Veh)	Circulating flow (Veh/hr)	Capacity (Veh/hr)	RFC	Throughput (Veh/hr)	Throughput (exit side) (Veh/hr)	Start queue (Veh)	End queue (Veh)	Delay (s)	Unsignalised level of service
A - Coddimor Ln	174	44	1544	347	0.502	174	96	0.9	1.0	20.734	C
B - A421 (East)	1533	383	136	1532	1.001	1501	1583	19.7	27.8	65.171	F
C - Whaddon Rd	442	111	1299	311	1.421	311	337	34.0	66.9	553.741	F
D - A421 (West)	1483	371	294	1349	1.100	1346	1316	46.4	80.8	178.952	F

08:30 - 08:45

Arm	Total Demand (Veh/hr)	Junction Arrivals (Veh)	Circulating flow (Veh/hr)	Capacity (Veh/hr)	RFC	Throughput (Veh/hr)	Throughput (exit side) (Veh/hr)	Start queue (Veh)	End queue (Veh)	Delay (s)	Unsignalised level of service
A - Coddimor Ln	142	36	1551	344	0.413	143	100	1.0	0.7	18.014	C
B - A421 (East)	1252	313	114	1544	0.811	1345	1580	27.8	4.7	24.707	C
C - Whaddon Rd	361	90	1160	391	0.924	385	299	66.9	61.0	548.185	F
D - A421 (West)	1211	303	352	1315	0.921	1299	1193	80.8	58.9	195.700	F

08:45 - 09:00

Arm	Total Demand (Veh/hr)	Junction Arrivals (Veh)	Circulating flow (Veh/hr)	Capacity (Veh/hr)	RFC	Throughput (Veh/hr)	Throughput (exit side) (Veh/hr)	Start queue (Veh)	End queue (Veh)	Delay (s)	Unsignalised level of service
A - Coddimor Ln	119	30	1576	331	0.360	120	109	0.7	0.6	17.089	C
B - A421 (East)	1049	262	98	1553	0.675	1059	1598	4.7	2.1	7.429	A
C - Whaddon Rd	302	76	916	531	0.570	522	241	61.0	6.1	239.591	F
D - A421 (West)	1014	254	460	1252	0.810	1225	978	58.9	6.2	99.752	F

2033 Base + CD + D, PM

Data Errors and Warnings

No errors or warnings

Junction Network

Junctions

Junction	Name	Junction type	Use circulating lanes	Arm order	Junction Delay (s)	Junction LOS
J7	Whaddon Crossroads	Standard Roundabout		A, B, C, D	144.55	F

Junction Network Options

Driving side	Lighting
Left	Normal/unknown

Traffic Demand

Demand Set Details

ID	Scenario name	Time Period name	Traffic profile type	Start time (HH:mm)	Finish time (HH:mm)	Time segment length (min)	Run automatically
D16	2033 Base + CD + D	PM	ONE HOUR	16:45	18:15	15	✓

Vehicle mix varies over turn	Vehicle mix varies over entry	Vehicle mix source	PCU Factor for a HV (PCU)
✓	✓	HV Percentages	2.00

Demand overview (Traffic)

Arm	Linked arm	Profile type	Use O-D data	Average Demand (Veh/hr)	Scaling Factor (%)
A - Coddimor Ln		ONE HOUR	✓	171	100.000
B - A421 (East)		ONE HOUR	✓	1483	100.000
C - Whaddon Rd		ONE HOUR	✓	338	100.000
D - A421 (West)		ONE HOUR	✓	1308	100.000

Origin-Destination Data

Demand (Veh/hr)

		To			
		A - Coddimor Ln	B - A421 (East)	C - Whaddon Rd	D - A421 (West)
From	A - Coddimor Ln	0	32	53	85
	B - A421 (East)	24	1	210	1248
	C - Whaddon Rd	51	251	0	36
	D - A421 (West)	31	1244	32	0

Proportions

		To			
		A - Coddimor Ln	B - A421 (East)	C - Whaddon Rd	D - A421 (West)
From	A - Coddimor Ln	0.00	0.19	0.31	0.50
	B - A421 (East)	0.02	0.00	0.14	0.84
	C - Whaddon Rd	0.15	0.74	0.00	0.11
	D - A421 (West)	0.02	0.95	0.02	0.00

Vehicle Mix

Heavy Vehicle Percentages

		To			
		A - Coddimor Ln	B - A421 (East)	C - Whaddon Rd	D - A421 (West)
From	A - Coddimor Ln	0	0	0	0
	B - A421 (East)	5	0	1	2
	C - Whaddon Rd	0	0	0	0
	D - A421 (West)	0	3	4	0

Average PCU Per Veh

		To			
		A - Coddimor Ln	B - A421 (East)	C - Whaddon Rd	D - A421 (West)
From	A - Coddimor Ln	1.000	1.000	1.000	1.000
	B - A421 (East)	1.048	1.000	1.012	1.019
	C - Whaddon Rd	1.000	1.000	1.000	1.000
	D - A421 (West)	1.000	1.029	1.036	1.000

Detailed Demand Data

Demand for each time segment

Time Segment	Arm	Demand (Veh/hr)	Demand in PCU (PCU/hr)
16:45-17:00	A - Coddimor Ln	129	129
	B - A421 (East)	1117	1137
	C - Whaddon Rd	254	254
	D - A421 (West)	984	1013
17:00-17:15	A - Coddimor Ln	154	154
	B - A421 (East)	1333	1358
	C - Whaddon Rd	303	303
	D - A421 (West)	1175	1209
17:15-17:30	A - Coddimor Ln	188	188
	B - A421 (East)	1633	1663
	C - Whaddon Rd	372	372
	D - A421 (West)	1440	1481
17:30-17:45	A - Coddimor Ln	188	188
	B - A421 (East)	1633	1663
	C - Whaddon Rd	372	372
	D - A421 (West)	1440	1481
17:45-18:00	A - Coddimor Ln	154	154
	B - A421 (East)	1333	1358
	C - Whaddon Rd	303	303
	D - A421 (West)	1175	1209
18:00-18:15	A - Coddimor Ln	129	129
	B - A421 (East)	1117	1137
	C - Whaddon Rd	254	254
	D - A421 (West)	984	1013

Results

Results Summary for whole modelled period

Arm	Max RFC	Max Delay (s)	Max Queue (Veh)	Max LOS	Average Demand (Veh/hr)	Total Junction Arrivals (Veh)
A - Coddimor Ln	0.52	20.68	1.0	C	157	235
B - A421 (East)	1.05	111.77	55.4	F	1361	2041
C - Whaddon Rd	1.32	511.63	48.3	F	310	465
D - A421 (West)	1.04	104.98	44.8	F	1200	1800

Main Results for each time segment

16:45 - 17:00

Arm	Total Demand (Veh/hr)	Junction Arrivals (Veh)	Circulating flow (Veh/hr)	Capacity (Veh/hr)	RFC	Throughput (Veh/hr)	Throughput (exit side) (Veh/hr)	Start queue (Veh)	End queue (Veh)	Delay (s)	Unsignalised level of service
A - Coddimor Ln	129	32	1139	581	0.221	127	79	0.0	0.3	7.921	A
B - A421 (East)	1117	279	127	1585	0.704	1107	1139	0.0	2.3	7.398	A
C - Whaddon Rd	254	64	1014	512	0.496	250	220	0.0	1.0	13.545	B
D - A421 (West)	984	246	243	1404	0.701	975	1022	0.0	2.3	8.224	A

17:00 - 17:15

Arm	Total Demand (Veh/hr)	Junction Arrivals (Veh)	Circulating flow (Veh/hr)	Capacity (Veh/hr)	RFC	Throughput (Veh/hr)	Throughput (exit side) (Veh/hr)	Start queue (Veh)	End queue (Veh)	Delay (s)	Unsignalised level of service
A - Coddimor Ln	154	38	1357	465	0.330	153	94	0.3	0.5	11.512	B
B - A421 (East)	1333	333	153	1571	0.849	1322	1358	2.3	5.1	13.864	B
C - Whaddon Rd	303	76	1211	400	0.759	296	263	1.0	2.7	32.733	D
D - A421 (West)	1175	294	288	1379	0.853	1164	1220	2.3	5.2	15.929	C

17:15 - 17:30

Arm	Total Demand (Veh/hr)	Junction Arrivals (Veh)	Circulating flow (Veh/hr)	Capacity (Veh/hr)	RFC	Throughput (Veh/hr)	Throughput (exit side) (Veh/hr)	Start queue (Veh)	End queue (Veh)	Delay (s)	Unsignalised level of service
A - Coddimor Ln	188	47	1529	373	0.505	186	100	0.5	1.0	19.098	C
B - A421 (East)	1633	408	184	1553	1.051	1521	1531	5.1	33.1	55.834	F
C - Whaddon Rd	372	93	1398	293	1.268	286	306	2.7	24.1	196.460	F
D - A421 (West)	1440	360	282	1382	1.042	1348	1403	5.2	28.2	55.846	F

17:30 - 17:45

Arm	Total Demand (Veh/hr)	Junction Arrivals (Veh)	Circulating flow (Veh/hr)	Capacity (Veh/hr)	RFC	Throughput (Veh/hr)	Throughput (exit side) (Veh/hr)	Start queue (Veh)	End queue (Veh)	Delay (s)	Unsignalised level of service
A - Coddimor Ln	188	47	1550	361	0.520	188	100	1.0	1.0	20.677	C
B - A421 (East)	1633	408	186	1552	1.052	1544	1552	33.1	55.4	111.766	F
C - Whaddon Rd	372	93	1419	281	1.321	281	311	24.1	46.9	467.332	F
D - A421 (West)	1440	360	277	1385	1.040	1373	1422	28.2	44.8	104.983	F

17:45 - 18:00

Arm	Total Demand (Veh/hr)	Junction Arrivals (Veh)	Circulating flow (Veh/hr)	Capacity (Veh/hr)	RFC	Throughput (Veh/hr)	Throughput (exit side) (Veh/hr)	Start queue (Veh)	End queue (Veh)	Delay (s)	Unsignalised level of service
A - Coddimor Ln	154	38	1515	381	0.403	155	101	1.0	0.7	16.058	C
B - A421 (East)	1333	333	158	1568	0.850	1524	1511	55.4	7.7	75.895	F
C - Whaddon Rd	303	76	1386	300	1.011	298	297	46.9	48.3	511.629	F
D - A421 (West)	1175	294	292	1376	0.854	1324	1391	44.8	7.7	70.799	F

18:00 - 18:15

Arm	Total Demand (Veh/hr)	Junction Arrivals (Veh)	Circulating flow (Veh/hr)	Capacity (Veh/hr)	RFC	Throughput (Veh/hr)	Throughput (exit side) (Veh/hr)	Start queue (Veh)	End queue (Veh)	Delay (s)	Unsignalised level of service
A - Coddimor Ln	129	32	1308	493	0.261	130	109	0.7	0.4	9.963	A
B - A421 (East)	1117	279	130	1584	0.705	1137	1308	7.7	2.5	8.428	A
C - Whaddon Rd	254	64	1041	497	0.511	443	226	48.3	1.2	157.919	F
D - A421 (West)	984	246	415	1306	0.754	1002	1069	7.7	3.2	12.474	B

2033 Base + CD + D with TP, AM

Data Errors and Warnings

No errors or warnings

Junction Network

Junctions

Junction	Name	Junction type	Use circulating lanes	Arm order	Junction Delay (s)	Junction LOS
J7	Whaddon Crossroads	Standard Roundabout		A, B, C, D	167.26	F

Junction Network Options

Driving side	Lighting
Left	Normal/unknown

Traffic Demand

Demand Set Details

ID	Scenario name	Time Period name	Traffic profile type	Start time (HH:mm)	Finish time (HH:mm)	Time segment length (min)	Run automatically
D17	2033 Base + CD + D with TP	AM	ONE HOUR	07:30	09:00	15	✓

Vehicle mix varies over turn	Vehicle mix varies over entry	Vehicle mix source	PCU Factor for a HV (PCU)
✓	✓	HV Percentages	2.00

Demand overview (Traffic)

Arm	Linked arm	Profile type	Use O-D data	Average Demand (Veh/hr)	Scaling Factor (%)
A - Coddimor Ln		ONE HOUR	✓	158	100.000
B - A421 (East)		ONE HOUR	✓	1382	100.000
C - Whaddon Rd		ONE HOUR	✓	400	100.000
D - A421 (West)		ONE HOUR	✓	1341	100.000

Origin-Destination Data

Demand (Veh/hr)

		To			
		A - Coddimor Ln	B - A421 (East)	C - Whaddon Rd	D - A421 (West)
From	A - Coddimor Ln	0	53	55	50
	B - A421 (East)	32	0	236	1115
	C - Whaddon Rd	49	285	0	67
	D - A421 (West)	23	1298	19	0

Proportions

		To			
		A - Coddimor Ln	B - A421 (East)	C - Whaddon Rd	D - A421 (West)
From	A - Coddimor Ln	0.00	0.33	0.35	0.32
	B - A421 (East)	0.02	0.00	0.17	0.81
	C - Whaddon Rd	0.12	0.71	0.00	0.17
	D - A421 (West)	0.02	0.97	0.01	0.00

Vehicle Mix

Heavy Vehicle Percentages

		To			
		A - Coddimor Ln	B - A421 (East)	C - Whaddon Rd	D - A421 (West)
From	A - Coddimor Ln	0	0	0	2
	B - A421 (East)	0	0	1	6
	C - Whaddon Rd	2	3	0	5
	D - A421 (West)	5	4	12	0

Average PCU Per Veh

		To			
		A - Coddimor Ln	B - A421 (East)	C - Whaddon Rd	D - A421 (West)
From	A - Coddimor Ln	1.000	1.000	1.000	1.023
	B - A421 (East)	1.000	1.000	1.011	1.060
	C - Whaddon Rd	1.023	1.033	1.000	1.052
	D - A421 (West)	1.050	1.045	1.118	1.000

Detailed Demand Data

Demand for each time segment

Time Segment	Arm	Demand (Veh/hr)	Demand in PCU (PCU/hr)
07:30-07:45	A - Coddimor Ln	119	120
	B - A421 (East)	1041	1093
	C - Whaddon Rd	301	312
	D - A421 (West)	1009	1056
07:45-08:00	A - Coddimor Ln	142	143
	B - A421 (East)	1243	1305
	C - Whaddon Rd	360	373
	D - A421 (West)	1205	1261
08:00-08:15	A - Coddimor Ln	174	176
	B - A421 (East)	1522	1598
	C - Whaddon Rd	441	456
	D - A421 (West)	1476	1544
08:15-08:30	A - Coddimor Ln	174	176
	B - A421 (East)	1522	1598
	C - Whaddon Rd	441	456
	D - A421 (West)	1476	1544
08:30-08:45	A - Coddimor Ln	142	143
	B - A421 (East)	1243	1305
	C - Whaddon Rd	360	373
	D - A421 (West)	1205	1261
08:45-09:00	A - Coddimor Ln	119	120
	B - A421 (East)	1041	1093
	C - Whaddon Rd	301	312
	D - A421 (West)	1009	1056

Results

Results Summary for whole modelled period

Arm	Max RFC	Max Delay (s)	Max Queue (Veh)	Max LOS	Average Demand (Veh/hr)	Total Junction Arrivals (Veh)
A - Coddimor Ln	0.50	20.72	1.0	C	145	218
B - A421 (East)	0.99	59.73	24.9	F	1268	1902
C - Whaddon Rd	1.41	533.07	65.0	F	367	551
D - A421 (West)	1.10	187.08	77.7	F	1230	1845

Main Results for each time segment

07:30 - 07:45

Arm	Total Demand (Veh/hr)	Junction Arrivals (Veh)	Circulating flow (Veh/hr)	Capacity (Veh/hr)	RFC	Throughput (Veh/hr)	Throughput (exit side) (Veh/hr)	Start queue (Veh)	End queue (Veh)	Delay (s)	Unsignalised level of service
A - Coddimor Ln	119	30	1192	537	0.222	118	78	0.0	0.3	8.569	A
B - A421 (East)	1041	260	93	1555	0.669	1033	1217	0.0	2.0	6.791	A
C - Whaddon Rd	301	75	894	543	0.555	297	232	0.0	1.2	14.362	B
D - A421 (West)	1009	252	271	1361	0.741	998	920	0.0	2.7	9.642	A

07:45 - 08:00

Arm	Total Demand (Veh/hr)	Junction Arrivals (Veh)	Circulating flow (Veh/hr)	Capacity (Veh/hr)	RFC	Throughput (Veh/hr)	Throughput (exit side) (Veh/hr)	Start queue (Veh)	End queue (Veh)	Delay (s)	Unsignalised level of service
A - Coddimor Ln	142	36	1415	417	0.341	141	92	0.3	0.5	13.011	B
B - A421 (East)	1243	311	112	1545	0.804	1235	1445	2.0	3.9	11.330	B
C - Whaddon Rd	360	90	1070	443	0.813	350	277	1.2	3.6	35.910	E
D - A421 (West)	1205	301	321	1333	0.904	1186	1099	2.7	7.5	22.072	C

08:00 - 08:15

Arm	Total Demand (Veh/hr)	Junction Arrivals (Veh)	Circulating flow (Veh/hr)	Capacity (Veh/hr)	RFC	Throughput (Veh/hr)	Throughput (exit side) (Veh/hr)	Start queue (Veh)	End queue (Veh)	Delay (s)	Unsignalised level of service
A - Coddimor Ln	174	44	1534	353	0.494	173	97	0.5	0.9	19.775	C
B - A421 (East)	1522	380	134	1533	0.993	1465	1572	3.9	18.2	36.891	E
C - Whaddon Rd	441	110	1270	328	1.344	323	329	3.6	33.0	229.887	F
D - A421 (West)	1476	369	303	1343	1.099	1327	1290	7.5	44.8	82.059	F

08:15 - 08:30

Arm	Total Demand (Veh/hr)	Junction Arrivals (Veh)	Circulating flow (Veh/hr)	Capacity (Veh/hr)	RFC	Throughput (Veh/hr)	Throughput (exit side) (Veh/hr)	Start queue (Veh)	End queue (Veh)	Delay (s)	Unsignalised level of service
A - Coddimor Ln	174	44	1544	347	0.502	174	96	0.9	1.0	20.725	C
B - A421 (East)	1522	380	136	1532	0.993	1495	1582	18.2	24.9	59.728	F
C - Whaddon Rd	441	110	1295	313	1.407	313	335	33.0	65.0	533.067	F
D - A421 (West)	1476	369	296	1348	1.095	1344	1313	44.8	77.7	172.829	F

08:30 - 08:45

Arm	Total Demand (Veh/hr)	Junction Arrivals (Veh)	Circulating flow (Veh/hr)	Capacity (Veh/hr)	RFC	Throughput (Veh/hr)	Throughput (exit side) (Veh/hr)	Start queue (Veh)	End queue (Veh)	Delay (s)	Unsignalised level of service
A - Coddimor Ln	142	36	1552	344	0.414	143	101	1.0	0.7	18.068	C
B - A421 (East)	1243	311	114	1544	0.805	1325	1581	24.9	4.5	21.521	C
C - Whaddon Rd	360	90	1144	400	0.901	394	294	65.0	56.6	516.381	F
D - A421 (West)	1205	301	359	1311	0.919	1294	1179	77.7	55.4	187.075	F

08:45 - 09:00

Arm	Total Demand (Veh/hr)	Junction Arrivals (Veh)	Circulating flow (Veh/hr)	Capacity (Veh/hr)	RFC	Throughput (Veh/hr)	Throughput (exit side) (Veh/hr)	Start queue (Veh)	End queue (Veh)	Delay (s)	Unsignalised level of service
A - Coddimor Ln	119	30	1559	341	0.350	120	109	0.7	0.6	16.371	C
B - A421 (East)	1041	260	98	1553	0.670	1050	1581	4.5	2.1	7.294	A
C - Whaddon Rd	301	75	909	534	0.564	520	238	56.6	1.9	206.785	F
D - A421 (West)	1009	252	458	1253	0.805	1209	971	55.4	5.4	88.976	F

2033 Base + CD + D with TP, PM

Data Errors and Warnings

No errors or warnings

Junction Network

Junctions

Junction	Name	Junction type	Use circulating lanes	Arm order	Junction Delay (s)	Junction LOS
J7	Whaddon Crossroads	Standard Roundabout		A, B, C, D	133.94	F

Junction Network Options

Driving side	Lighting
Left	Normal/unknown

Traffic Demand

Demand Set Details

ID	Scenario name	Time Period name	Traffic profile type	Start time (HH:mm)	Finish time (HH:mm)	Time segment length (min)	Run automatically
D18	2033 Base + CD + D with TP	PM	ONE HOUR	16:45	18:15	15	✓

Vehicle mix varies over turn	Vehicle mix varies over entry	Vehicle mix source	PCU Factor for a HV (PCU)
✓	✓	HV Percentages	2.00

Demand overview (Traffic)

Arm	Linked arm	Profile type	Use O-D data	Average Demand (Veh/hr)	Scaling Factor (%)
A - Coddimor Ln		ONE HOUR	✓	171	100.000
B - A421 (East)		ONE HOUR	✓	1474	100.000
C - Whaddon Rd		ONE HOUR	✓	334	100.000
D - A421 (West)		ONE HOUR	✓	1299	100.000

Origin-Destination Data

Demand (Veh/hr)

		To			
		A - Coddimor Ln	B - A421 (East)	C - Whaddon Rd	D - A421 (West)
From	A - Coddimor Ln	0	32	53	85
	B - A421 (East)	24	1	208	1240
	C - Whaddon Rd	51	248	0	36
	D - A421 (West)	31	1235	32	0

Proportions

		To			
		A - Coddimor Ln	B - A421 (East)	C - Whaddon Rd	D - A421 (West)
From	A - Coddimor Ln	0.00	0.19	0.31	0.50
	B - A421 (East)	0.02	0.00	0.14	0.84
	C - Whaddon Rd	0.15	0.74	0.00	0.11
	D - A421 (West)	0.02	0.95	0.02	0.00

Vehicle Mix

Heavy Vehicle Percentages

		To			
		A - Coddimor Ln	B - A421 (East)	C - Whaddon Rd	D - A421 (West)
From	A - Coddimor Ln	0	0	0	0
	B - A421 (East)	5	0	1	2
	C - Whaddon Rd	0	0	0	0
	D - A421 (West)	0	3	4	0

Average PCU Per Veh

		To			
		A - Coddimor Ln	B - A421 (East)	C - Whaddon Rd	D - A421 (West)
From	A - Coddimor Ln	1.000	1.000	1.000	1.000
	B - A421 (East)	1.048	1.000	1.012	1.019
	C - Whaddon Rd	1.000	1.000	1.000	1.000
	D - A421 (West)	1.000	1.029	1.036	1.000

Detailed Demand Data

Demand for each time segment

Time Segment	Arm	Demand (Veh/hr)	Demand in PCU (PCU/hr)
16:45-17:00	A - Coddimor Ln	129	129
	B - A421 (East)	1109	1130
	C - Whaddon Rd	252	252
	D - A421 (West)	978	1006
17:00-17:15	A - Coddimor Ln	154	154
	B - A421 (East)	1325	1349
	C - Whaddon Rd	300	300
	D - A421 (West)	1167	1201
17:15-17:30	A - Coddimor Ln	188	188
	B - A421 (East)	1623	1653
	C - Whaddon Rd	368	368
	D - A421 (West)	1430	1471
17:30-17:45	A - Coddimor Ln	188	188
	B - A421 (East)	1623	1653
	C - Whaddon Rd	368	368
	D - A421 (West)	1430	1471
17:45-18:00	A - Coddimor Ln	154	154
	B - A421 (East)	1325	1349
	C - Whaddon Rd	300	300
	D - A421 (West)	1167	1201
18:00-18:15	A - Coddimor Ln	129	129
	B - A421 (East)	1109	1130
	C - Whaddon Rd	252	252
	D - A421 (West)	978	1006

Results

Results Summary for whole modelled period

Arm	Max RFC	Max Delay (s)	Max Queue (Veh)	Max LOS	Average Demand (Veh/hr)	Total Junction Arrivals (Veh)
A - Coddimor Ln	0.52	20.50	1.0	C	157	235
B - A421 (East)	1.05	104.73	51.2	F	1352	2028
C - Whaddon Rd	1.31	467.21	44.6	F	307	460
D - A421 (West)	1.03	97.92	41.1	F	1192	1788

Main Results for each time segment

16:45 - 17:00

Arm	Total Demand (Veh/hr)	Junction Arrivals (Veh)	Circulating flow (Veh/hr)	Capacity (Veh/hr)	RFC	Throughput (Veh/hr)	Throughput (exit side) (Veh/hr)	Start queue (Veh)	End queue (Veh)	Delay (s)	Unsignalised level of service
A - Coddimor Ln	129	32	1130	586	0.220	127	79	0.0	0.3	7.840	A
B - A421 (East)	1109	277	127	1585	0.700	1100	1130	0.0	2.3	7.299	A
C - Whaddon Rd	252	63	1009	516	0.488	248	219	0.0	0.9	13.263	B
D - A421 (West)	978	244	240	1406	0.695	969	1016	0.0	2.2	8.082	A

17:00 - 17:15

Arm	Total Demand (Veh/hr)	Junction Arrivals (Veh)	Circulating flow (Veh/hr)	Capacity (Veh/hr)	RFC	Throughput (Veh/hr)	Throughput (exit side) (Veh/hr)	Start queue (Veh)	End queue (Veh)	Delay (s)	Unsignalised level of service
A - Coddimor Ln	154	38	1348	470	0.327	153	94	0.3	0.5	11.322	B
B - A421 (East)	1325	331	153	1571	0.843	1314	1348	2.3	4.9	13.476	B
C - Whaddon Rd	300	75	1205	404	0.744	294	262	0.9	2.6	31.122	D
D - A421 (West)	1167	292	285	1380	0.846	1157	1214	2.2	5.0	15.370	C

17:15 - 17:30

Arm	Total Demand (Veh/hr)	Junction Arrivals (Veh)	Circulating flow (Veh/hr)	Capacity (Veh/hr)	RFC	Throughput (Veh/hr)	Throughput (exit side) (Veh/hr)	Start queue (Veh)	End queue (Veh)	Delay (s)	Unsignalised level of service
A - Coddimor Ln	188	47	1526	375	0.502	186	101	0.5	1.0	18.888	C
B - A421 (East)	1623	406	184	1553	1.045	1518	1527	4.9	31.1	53.317	F
C - Whaddon Rd	368	92	1397	294	1.250	287	305	2.6	22.9	187.526	F
D - A421 (West)	1430	357	282	1382	1.035	1344	1401	5.0	26.4	53.176	F

17:30 - 17:45

Arm	Total Demand (Veh/hr)	Junction Arrivals (Veh)	Circulating flow (Veh/hr)	Capacity (Veh/hr)	RFC	Throughput (Veh/hr)	Throughput (exit side) (Veh/hr)	Start queue (Veh)	End queue (Veh)	Delay (s)	Unsignalised level of service
A - Coddimor Ln	188	47	1548	363	0.518	188	101	1.0	1.0	20.498	C
B - A421 (East)	1623	406	186	1552	1.045	1542	1549	31.1	51.2	104.732	F
C - Whaddon Rd	368	92	1418	282	1.305	281	310	22.9	44.6	441.336	F
D - A421 (West)	1430	357	277	1384	1.033	1371	1422	26.4	41.1	97.920	F

17:45 - 18:00

Arm	Total Demand (Veh/hr)	Junction Arrivals (Veh)	Circulating flow (Veh/hr)	Capacity (Veh/hr)	RFC	Throughput (Veh/hr)	Throughput (exit side) (Veh/hr)	Start queue (Veh)	End queue (Veh)	Delay (s)	Unsignalised level of service
A - Coddimor Ln	154	38	1498	389	0.394	155	102	1.0	0.7	15.454	C
B - A421 (East)	1325	331	158	1568	0.845	1502	1495	51.2	6.8	65.839	F
C - Whaddon Rd	300	75	1368	311	0.967	304	293	44.6	43.8	467.213	F
D - A421 (West)	1167	292	297	1373	0.850	1304	1374	41.1	7.1	61.887	F

18:00 - 18:15

Arm	Total Demand (Veh/hr)	Junction Arrivals (Veh)	Circulating flow (Veh/hr)	Capacity (Veh/hr)	RFC	Throughput (Veh/hr)	Throughput (exit side) (Veh/hr)	Start queue (Veh)	End queue (Veh)	Delay (s)	Unsignalised level of service
A - Coddimor Ln	129	32	1284	505	0.254	130	107	0.7	0.3	9.620	A
B - A421 (East)	1109	277	130	1584	0.701	1127	1284	6.8	2.4	8.178	A
C - Whaddon Rd	252	63	1033	502	0.501	422	224	43.8	1.1	123.400	F
D - A421 (West)	978	244	397	1317	0.743	994	1059	7.1	3.0	11.667	B

2033 Base + CD + D - ST, AM

Data Errors and Warnings

No errors or warnings

Junction Network

Junctions

Junction	Name	Junction type	Use circulating lanes	Arm order	Junction Delay (s)	Junction LOS
J7	Whaddon Crossroads	Standard Roundabout		A, B, C, D	199.75	F

Junction Network Options

Driving side	Lighting
Left	Normal/unknown

Traffic Demand

Demand Set Details

ID	Scenario name	Time Period name	Traffic profile type	Start time (HH:mm)	Finish time (HH:mm)	Time segment length (min)	Run automatically
D19	2033 Base + CD + D - ST	AM	ONE HOUR	07:30	09:00	15	✓

Vehicle mix varies over turn	Vehicle mix varies over entry	Vehicle mix source	PCU Factor for a HV (PCU)
✓	✓	HV Percentages	2.00

Demand overview (Traffic)

Arm	Linked arm	Profile type	Use O-D data	Average Demand (Veh/hr)	Scaling Factor (%)
A - Coddimor Ln		ONE HOUR	✓	158	100.000
B - A421 (East)		ONE HOUR	✓	1424	100.000
C - Whaddon Rd		ONE HOUR	✓	406	100.000
D - A421 (West)		ONE HOUR	✓	1360	100.000

Origin-Destination Data

Demand (Veh/hr)

		To			
		A - Coddimor Ln	B - A421 (East)	C - Whaddon Rd	D - A421 (West)
From	A - Coddimor Ln	0	53	55	50
	B - A421 (East)	32	0	248	1144
	C - Whaddon Rd	49	290	0	67
	D - A421 (West)	23	1317	19	0

Proportions

		To			
		A - Coddimor Ln	B - A421 (East)	C - Whaddon Rd	D - A421 (West)
From	A - Coddimor Ln	0.00	0.33	0.35	0.32
	B - A421 (East)	0.02	0.00	0.17	0.80
	C - Whaddon Rd	0.12	0.71	0.00	0.16
	D - A421 (West)	0.02	0.97	0.01	0.00

Vehicle Mix

Heavy Vehicle Percentages

		To			
		A - Coddimor Ln	B - A421 (East)	C - Whaddon Rd	D - A421 (West)
From	A - Coddimor Ln	0	0	0	2
	B - A421 (East)	0	0	1	6
	C - Whaddon Rd	2	3	0	5
	D - A421 (West)	5	4	12	0

Average PCU Per Veh

		To			
		A - Coddimor Ln	B - A421 (East)	C - Whaddon Rd	D - A421 (West)
From	A - Coddimor Ln	1.000	1.000	1.000	1.023
	B - A421 (East)	1.000	1.000	1.011	1.060
	C - Whaddon Rd	1.023	1.033	1.000	1.052
	D - A421 (West)	1.050	1.045	1.118	1.000

Detailed Demand Data

Demand for each time segment

Time Segment	Arm	Demand (Veh/hr)	Demand in PCU (PCU/hr)
07:30-07:45	A - Coddimor Ln	119	120
	B - A421 (East)	1072	1126
	C - Whaddon Rd	306	316
	D - A421 (West)	1024	1071
07:45-08:00	A - Coddimor Ln	142	143
	B - A421 (East)	1280	1344
	C - Whaddon Rd	365	378
	D - A421 (West)	1222	1279
08:00-08:15	A - Coddimor Ln	174	176
	B - A421 (East)	1568	1646
	C - Whaddon Rd	447	463
	D - A421 (West)	1497	1566
08:15-08:30	A - Coddimor Ln	174	176
	B - A421 (East)	1568	1646
	C - Whaddon Rd	447	463
	D - A421 (West)	1497	1566
08:30-08:45	A - Coddimor Ln	142	143
	B - A421 (East)	1280	1344
	C - Whaddon Rd	365	378
	D - A421 (West)	1222	1279
08:45-09:00	A - Coddimor Ln	119	120
	B - A421 (East)	1072	1126
	C - Whaddon Rd	306	316
	D - A421 (West)	1024	1071

Results

Results Summary for whole modelled period

Arm	Max RFC	Max Delay (s)	Max Queue (Veh)	Max LOS	Average Demand (Veh/hr)	Total Junction Arrivals (Veh)
A - Coddimor Ln	0.50	20.78	1.0	C	145	218
B - A421 (East)	1.02	83.89	38.3	F	1307	1960
C - Whaddon Rd	1.45	643.84	73.1	F	373	559
D - A421 (West)	1.11	210.36	86.9	F	1248	1872

Main Results for each time segment

07:30 - 07:45

Arm	Total Demand (Veh/hr)	Junction Arrivals (Veh)	Circulating flow (Veh/hr)	Capacity (Veh/hr)	RFC	Throughput (Veh/hr)	Throughput (exit side) (Veh/hr)	Start queue (Veh)	End queue (Veh)	Delay (s)	Unsignalised level of service
A - Coddimor Ln	119	30	1210	527	0.226	118	78	0.0	0.3	8.767	A
B - A421 (East)	1072	268	93	1556	0.689	1064	1235	0.0	2.2	7.196	A
C - Whaddon Rd	306	76	916	531	0.576	300	241	0.0	1.3	15.325	C
D - A421 (West)	1024	256	275	1359	0.753	1012	941	0.0	2.9	10.058	B

07:45 - 08:00

Arm	Total Demand (Veh/hr)	Junction Arrivals (Veh)	Circulating flow (Veh/hr)	Capacity (Veh/hr)	RFC	Throughput (Veh/hr)	Throughput (exit side) (Veh/hr)	Start queue (Veh)	End queue (Veh)	Delay (s)	Unsignalised level of service
A - Coddimor Ln	142	36	1432	408	0.349	141	92	0.3	0.5	13.461	B
B - A421 (East)	1280	320	111	1545	0.828	1271	1462	2.2	4.5	12.700	B
C - Whaddon Rd	365	91	1094	428	0.852	353	288	1.3	4.4	42.313	E
D - A421 (West)	1222	306	324	1331	0.918	1200	1124	2.9	8.4	24.163	C

08:00 - 08:15

Arm	Total Demand (Veh/hr)	Junction Arrivals (Veh)	Circulating flow (Veh/hr)	Capacity (Veh/hr)	RFC	Throughput (Veh/hr)	Throughput (exit side) (Veh/hr)	Start queue (Veh)	End queue (Veh)	Delay (s)	Unsignalised level of service
A - Coddimor Ln	174	44	1537	351	0.496	173	95	0.5	0.9	19.889	C
B - A421 (East)	1568	392	134	1533	1.023	1486	1575	4.5	24.9	46.074	E
C - Whaddon Rd	447	112	1282	321	1.393	317	338	4.4	36.8	259.808	F
D - A421 (West)	1497	374	299	1346	1.113	1332	1301	8.4	49.6	89.329	F

08:15 - 08:30

Arm	Total Demand (Veh/hr)	Junction Arrivals (Veh)	Circulating flow (Veh/hr)	Capacity (Veh/hr)	RFC	Throughput (Veh/hr)	Throughput (exit side) (Veh/hr)	Start queue (Veh)	End queue (Veh)	Delay (s)	Unsignalised level of service
A - Coddimor Ln	174	44	1545	347	0.502	174	94	0.9	1.0	20.783	C
B - A421 (East)	1568	392	135	1532	1.023	1514	1583	24.9	38.3	83.888	F
C - Whaddon Rd	447	112	1306	307	1.454	307	344	36.8	71.8	613.123	F
D - A421 (West)	1497	374	291	1350	1.109	1348	1322	49.6	86.9	190.698	F

08:30 - 08:45

Arm	Total Demand (Veh/hr)	Junction Arrivals (Veh)	Circulating flow (Veh/hr)	Capacity (Veh/hr)	RFC	Throughput (Veh/hr)	Throughput (exit side) (Veh/hr)	Start queue (Veh)	End queue (Veh)	Delay (s)	Unsignalised level of service
A - Coddimor Ln	142	36	1546	347	0.411	143	98	1.0	0.7	17.816	C
B - A421 (East)	1280	320	114	1544	0.829	1411	1575	38.3	5.5	40.635	E
C - Whaddon Rd	365	91	1211	362	1.009	360	315	71.8	73.1	643.838	F
D - A421 (West)	1222	306	333	1326	0.922	1311	1238	86.9	64.8	210.361	F

08:45 - 09:00

Arm	Total Demand (Veh/hr)	Junction Arrivals (Veh)	Circulating flow (Veh/hr)	Capacity (Veh/hr)	RFC	Throughput (Veh/hr)	Throughput (exit side) (Veh/hr)	Start queue (Veh)	End queue (Veh)	Delay (s)	Unsignalised level of service
A - Coddimor Ln	119	30	1583	327	0.364	120	108	0.7	0.6	17.376	C
B - A421 (East)	1072	268	98	1553	0.690	1085	1605	5.5	2.3	7.897	A
C - Whaddon Rd	306	76	934	520	0.588	513	249	73.1	21.3	336.940	F
D - A421 (West)	1024	256	453	1256	0.815	1237	994	64.8	11.4	116.324	F

2033 Base + CD + D - ST, PM

Data Errors and Warnings

No errors or warnings

Junction Network

Junctions

Junction	Name	Junction type	Use circulating lanes	Arm order	Junction Delay (s)	Junction LOS
J7	Whaddon Crossroads	Standard Roundabout		A, B, C, D	160.87	F

Junction Network Options

Driving side	Lighting
Left	Normal/unknown

Traffic Demand

Demand Set Details

ID	Scenario name	Time Period name	Traffic profile type	Start time (HH:mm)	Finish time (HH:mm)	Time segment length (min)	Run automatically
D20	2033 Base + CD + D - ST	PM	ONE HOUR	16:45	18:15	15	✓

Vehicle mix varies over turn	Vehicle mix varies over entry	Vehicle mix source	PCU Factor for a HV (PCU)
✓	✓	HV Percentages	2.00

Demand overview (Traffic)

Arm	Linked arm	Profile type	Use O-D data	Average Demand (Veh/hr)	Scaling Factor (%)
A - Coddimor Ln		ONE HOUR	✓	171	100.000
B - A421 (East)		ONE HOUR	✓	1495	100.000
C - Whaddon Rd		ONE HOUR	✓	345	100.000
D - A421 (West)		ONE HOUR	✓	1322	100.000

Origin-Destination Data

Demand (Veh/hr)

		To			
		A - Coddimor Ln	B - A421 (East)	C - Whaddon Rd	D - A421 (West)
From	A - Coddimor Ln	0	32	53	85
	B - A421 (East)	24	1	214	1256
	C - Whaddon Rd	51	259	0	36
	D - A421 (West)	31	1258	32	0

Proportions

		To			
		A - Coddimor Ln	B - A421 (East)	C - Whaddon Rd	D - A421 (West)
From	A - Coddimor Ln	0.00	0.19	0.31	0.50
	B - A421 (East)	0.02	0.00	0.14	0.84
	C - Whaddon Rd	0.15	0.75	0.00	0.10
	D - A421 (West)	0.02	0.95	0.02	0.00

Vehicle Mix

Heavy Vehicle Percentages

		To			
		A - Coddimor Ln	B - A421 (East)	C - Whaddon Rd	D - A421 (West)
From	A - Coddimor Ln	0	0	0	0
	B - A421 (East)	5	0	1	2
	C - Whaddon Rd	0	0	0	0
	D - A421 (West)	0	3	4	0

Average PCU Per Veh

		To			
		A - Coddimor Ln	B - A421 (East)	C - Whaddon Rd	D - A421 (West)
From	A - Coddimor Ln	1.000	1.000	1.000	1.000
	B - A421 (East)	1.048	1.000	1.012	1.019
	C - Whaddon Rd	1.000	1.000	1.000	1.000
	D - A421 (West)	1.000	1.029	1.036	1.000

Detailed Demand Data

Demand for each time segment

Time Segment	Arm	Demand (Veh/hr)	Demand in PCU (PCU/hr)
16:45-17:00	A - Coddimor Ln	129	129
	B - A421 (East)	1125	1146
	C - Whaddon Rd	260	260
	D - A421 (West)	995	1024
17:00-17:15	A - Coddimor Ln	154	154
	B - A421 (East)	1344	1369
	C - Whaddon Rd	311	311
	D - A421 (West)	1188	1223
17:15-17:30	A - Coddimor Ln	188	188
	B - A421 (East)	1646	1676
	C - Whaddon Rd	380	380
	D - A421 (West)	1455	1497
17:30-17:45	A - Coddimor Ln	188	188
	B - A421 (East)	1646	1676
	C - Whaddon Rd	380	380
	D - A421 (West)	1455	1497
17:45-18:00	A - Coddimor Ln	154	154
	B - A421 (East)	1344	1369
	C - Whaddon Rd	311	311
	D - A421 (West)	1188	1223
18:00-18:15	A - Coddimor Ln	129	129
	B - A421 (East)	1125	1146
	C - Whaddon Rd	260	260
	D - A421 (West)	995	1024

Results

Results Summary for whole modelled period

Arm	Max RFC	Max Delay (s)	Max Queue (Veh)	Max LOS	Average Demand (Veh/hr)	Total Junction Arrivals (Veh)
A - Coddimor Ln	0.52	20.97	1.1	C	157	235
B - A421 (East)	1.06	120.72	60.8	F	1372	2057
C - Whaddon Rd	1.35	576.72	56.3	F	317	476
D - A421 (West)	1.05	117.75	51.5	F	1213	1820

Main Results for each time segment

16:45 - 17:00

Arm	Total Demand (Veh/hr)	Junction Arrivals (Veh)	Circulating flow (Veh/hr)	Capacity (Veh/hr)	RFC	Throughput (Veh/hr)	Throughput (exit side) (Veh/hr)	Start queue (Veh)	End queue (Veh)	Delay (s)	Unsignalised level of service
A - Coddimor Ln	129	32	1155	572	0.225	127	79	0.0	0.3	8.071	A
B - A421 (East)	1125	281	127	1585	0.710	1116	1155	0.0	2.4	7.527	A
C - Whaddon Rd	260	65	1020	509	0.511	256	223	0.0	1.0	14.008	B
D - A421 (West)	995	249	248	1401	0.710	986	1027	0.0	2.4	8.483	A

17:00 - 17:15

Arm	Total Demand (Veh/hr)	Junction Arrivals (Veh)	Circulating flow (Veh/hr)	Capacity (Veh/hr)	RFC	Throughput (Veh/hr)	Throughput (exit side) (Veh/hr)	Start queue (Veh)	End queue (Veh)	Delay (s)	Unsignalised level of service
A - Coddimor Ln	154	38	1375	455	0.337	153	94	0.3	0.5	11.870	B
B - A421 (East)	1344	336	153	1571	0.855	1332	1376	2.4	5.3	14.372	B
C - Whaddon Rd	311	78	1218	396	0.784	302	267	1.0	3.1	35.627	E
D - A421 (West)	1188	297	294	1375	0.864	1176	1226	2.4	5.6	16.993	C

17:15 - 17:30

Arm	Total Demand (Veh/hr)	Junction Arrivals (Veh)	Circulating flow (Veh/hr)	Capacity (Veh/hr)	RFC	Throughput (Veh/hr)	Throughput (exit side) (Veh/hr)	Start queue (Veh)	End queue (Veh)	Delay (s)	Unsignalised level of service
A - Coddimor Ln	188	47	1536	369	0.510	186	99	0.5	1.0	19.465	C
B - A421 (East)	1646	411	184	1554	1.059	1524	1538	5.3	35.7	59.038	F
C - Whaddon Rd	380	95	1399	293	1.299	287	309	3.1	26.4	212.650	F
D - A421 (West)	1455	364	283	1381	1.054	1352	1403	5.6	31.5	60.689	F

17:30 - 17:45

Arm	Total Demand (Veh/hr)	Junction Arrivals (Veh)	Circulating flow (Veh/hr)	Capacity (Veh/hr)	RFC	Throughput (Veh/hr)	Throughput (exit side) (Veh/hr)	Start queue (Veh)	End queue (Veh)	Delay (s)	Unsignalised level of service
A - Coddimor Ln	188	47	1555	359	0.524	188	99	1.0	1.1	20.975	C
B - A421 (East)	1646	411	186	1553	1.060	1546	1557	35.7	60.8	120.719	F
C - Whaddon Rd	380	95	1418	282	1.349	281	313	26.4	51.2	512.611	F
D - A421 (West)	1455	364	278	1384	1.052	1375	1421	31.5	51.5	117.747	F

17:45 - 18:00

Arm	Total Demand (Veh/hr)	Junction Arrivals (Veh)	Circulating flow (Veh/hr)	Capacity (Veh/hr)	RFC	Throughput (Veh/hr)	Throughput (exit side) (Veh/hr)	Start queue (Veh)	End queue (Veh)	Delay (s)	Unsignalised level of service
A - Coddimor Ln	154	38	1542	366	0.419	155	100	1.1	0.7	17.134	C
B - A421 (East)	1344	336	159	1568	0.857	1545	1538	60.8	10.4	89.230	F
C - Whaddon Rd	311	78	1402	291	1.066	290	302	51.2	56.3	576.721	F
D - A421 (West)	1188	297	286	1379	0.862	1355	1405	51.5	9.9	88.086	F

18:00 - 18:15

Arm	Total Demand (Veh/hr)	Junction Arrivals (Veh)	Circulating flow (Veh/hr)	Capacity (Veh/hr)	RFC	Throughput (Veh/hr)	Throughput (exit side) (Veh/hr)	Start queue (Veh)	End queue (Veh)	Delay (s)	Unsignalised level of service
A - Coddimor Ln	129	32	1355	468	0.275	130	113	0.7	0.4	10.702	B
B - A421 (East)	1125	281	130	1583	0.711	1157	1355	10.4	2.5	9.031	A
C - Whaddon Rd	260	65	1056	488	0.533	478	231	56.3	1.8	226.601	F
D - A421 (West)	995	249	448	1287	0.773	1020	1086	9.9	3.6	14.596	B

2033 Base + CD + SP (ST), AM

Data Errors and Warnings

No errors or warnings

Junction Network

Junctions

Junction	Name	Junction type	Use circulating lanes	Arm order	Junction Delay (s)	Junction LOS
J7	Whaddon Crossroads	Standard Roundabout		A, B, C, D	142.38	F

Junction Network Options

Driving side	Lighting
Left	Normal/unknown

Traffic Demand

Demand Set Details

ID	Scenario name	Time Period name	Traffic profile type	Start time (HH:mm)	Finish time (HH:mm)	Time segment length (min)	Run automatically
D21	2033 Base + CD + SP (ST)	AM	ONE HOUR	07:30	09:00	15	✓

Vehicle mix varies over turn	Vehicle mix varies over entry	Vehicle mix source	PCU Factor for a HV (PCU)
✓	✓	HV Percentages	2.00

Demand overview (Traffic)

Arm	Linked arm	Profile type	Use O-D data	Average Demand (Veh/hr)	Scaling Factor (%)
A - Coddimor Ln		ONE HOUR	✓	158	100.000
B - A421 (East)		ONE HOUR	✓	1358	100.000
C - Whaddon Rd		ONE HOUR	✓	398	100.000
D - A421 (West)		ONE HOUR	✓	1315	100.000

Origin-Destination Data

Demand (Veh/hr)

		To			
		A - Coddimor Ln	B - A421 (East)	C - Whaddon Rd	D - A421 (West)
From	A - Coddimor Ln	0	53	55	50
	B - A421 (East)	32	0	231	1095
	C - Whaddon Rd	49	282	0	67
	D - A421 (West)	23	1273	19	0

Proportions

		To			
		A - Coddimor Ln	B - A421 (East)	C - Whaddon Rd	D - A421 (West)
From	A - Coddimor Ln	0.00	0.33	0.35	0.32
	B - A421 (East)	0.02	0.00	0.17	0.81
	C - Whaddon Rd	0.12	0.71	0.00	0.17
	D - A421 (West)	0.02	0.97	0.01	0.00

Vehicle Mix

Heavy Vehicle Percentages

		To			
		A - Coddimor Ln	B - A421 (East)	C - Whaddon Rd	D - A421 (West)
From	A - Coddimor Ln	0	0	0	2
	B - A421 (East)	0	0	1	6
	C - Whaddon Rd	2	3	0	5
	D - A421 (West)	5	4	12	0

Average PCU Per Veh

		To			
		A - Coddimor Ln	B - A421 (East)	C - Whaddon Rd	D - A421 (West)
From	A - Coddimor Ln	1.000	1.000	1.000	1.023
	B - A421 (East)	1.000	1.000	1.011	1.060
	C - Whaddon Rd	1.023	1.033	1.000	1.052
	D - A421 (West)	1.050	1.045	1.118	1.000

Detailed Demand Data

Demand for each time segment

Time Segment	Arm	Demand (Veh/hr)	Demand in PCU (PCU/hr)
07:30-07:45	A - Coddimor Ln	119	120
	B - A421 (East)	1022	1074
	C - Whaddon Rd	300	310
	D - A421 (West)	990	1035
07:45-08:00	A - Coddimor Ln	142	143
	B - A421 (East)	1221	1282
	C - Whaddon Rd	358	371
	D - A421 (West)	1182	1236
08:00-08:15	A - Coddimor Ln	174	176
	B - A421 (East)	1495	1570
	C - Whaddon Rd	438	454
	D - A421 (West)	1448	1514
08:15-08:30	A - Coddimor Ln	174	176
	B - A421 (East)	1495	1570
	C - Whaddon Rd	438	454
	D - A421 (West)	1448	1514
08:30-08:45	A - Coddimor Ln	142	143
	B - A421 (East)	1221	1282
	C - Whaddon Rd	358	371
	D - A421 (West)	1182	1236
08:45-09:00	A - Coddimor Ln	119	120
	B - A421 (East)	1022	1074
	C - Whaddon Rd	300	310
	D - A421 (West)	990	1035

Results

Results Summary for whole modelled period

Arm	Max RFC	Max Delay (s)	Max Queue (Veh)	Max LOS	Average Demand (Veh/hr)	Total Junction Arrivals (Veh)
A - Coddimor Ln	0.50	20.67	1.0	C	145	218
B - A421 (East)	0.98	48.85	19.5	E	1246	1869
C - Whaddon Rd	1.37	482.85	60.1	F	365	548
D - A421 (West)	1.08	151.43	65.8	F	1207	1810

Main Results for each time segment

07:30 - 07:45

Arm	Total Demand (Veh/hr)	Junction Arrivals (Veh)	Circulating flow (Veh/hr)	Capacity (Veh/hr)	RFC	Throughput (Veh/hr)	Throughput (exit side) (Veh/hr)	Start queue (Veh)	End queue (Veh)	Delay (s)	Unsignalised level of service
A - Coddimor Ln	119	30	1172	548	0.218	118	78	0.0	0.3	8.357	A
B - A421 (East)	1022	256	93	1555	0.657	1015	1197	0.0	1.9	6.576	A
C - Whaddon Rd	300	75	880	551	0.544	295	228	0.0	1.2	13.842	B
D - A421 (West)	990	247	270	1362	0.727	980	906	0.0	2.6	9.181	A

07:45 - 08:00

Arm	Total Demand (Veh/hr)	Junction Arrivals (Veh)	Circulating flow (Veh/hr)	Capacity (Veh/hr)	RFC	Throughput (Veh/hr)	Throughput (exit side) (Veh/hr)	Start queue (Veh)	End queue (Veh)	Delay (s)	Unsignalised level of service
A - Coddimor Ln	142	36	1394	429	0.332	141	92	0.3	0.5	12.502	B
B - A421 (East)	1221	305	112	1545	0.790	1214	1424	1.9	3.6	10.658	B
C - Whaddon Rd	358	89	1053	452	0.792	350	273	1.2	3.2	32.791	D
D - A421 (West)	1182	296	320	1333	0.887	1166	1083	2.6	6.6	19.833	C

08:00 - 08:15

Arm	Total Demand (Veh/hr)	Junction Arrivals (Veh)	Circulating flow (Veh/hr)	Capacity (Veh/hr)	RFC	Throughput (Veh/hr)	Throughput (exit side) (Veh/hr)	Start queue (Veh)	End queue (Veh)	Delay (s)	Unsignalised level of service
A - Coddimor Ln	174	44	1530	355	0.491	173	98	0.5	0.9	19.537	C
B - A421 (East)	1495	374	135	1533	0.976	1449	1568	3.6	15.1	32.421	D
C - Whaddon Rd	438	110	1258	335	1.309	329	326	3.2	30.6	210.180	F
D - A421 (West)	1448	362	308	1340	1.080	1320	1279	6.6	38.6	73.002	F

08:15 - 08:30

Arm	Total Demand (Veh/hr)	Junction Arrivals (Veh)	Circulating flow (Veh/hr)	Capacity (Veh/hr)	RFC	Throughput (Veh/hr)	Throughput (exit side) (Veh/hr)	Start queue (Veh)	End queue (Veh)	Delay (s)	Unsignalised level of service
A - Coddimor Ln	174	44	1543	348	0.501	174	98	0.9	1.0	20.670	C
B - A421 (East)	1495	374	136	1532	0.976	1478	1581	15.1	19.5	48.850	E
C - Whaddon Rd	438	110	1282	321	1.366	320	331	30.6	60.1	482.849	F
D - A421 (West)	1448	362	302	1344	1.077	1339	1301	38.6	65.8	149.570	F

08:30 - 08:45

Arm	Total Demand (Veh/hr)	Junction Arrivals (Veh)	Circulating flow (Veh/hr)	Capacity (Veh/hr)	RFC	Throughput (Veh/hr)	Throughput (exit side) (Veh/hr)	Start queue (Veh)	End queue (Veh)	Delay (s)	Unsignalised level of service
A - Coddimor Ln	142	36	1553	343	0.415	143	104	1.0	0.7	18.107	C
B - A421 (East)	1221	305	115	1543	0.791	1283	1581	19.5	4.0	16.681	C
C - Whaddon Rd	358	89	1111	419	0.854	412	287	60.1	46.5	443.262	F
D - A421 (West)	1182	296	374	1302	0.908	1283	1149	65.8	40.6	151.427	F

08:45 - 09:00

Arm	Total Demand (Veh/hr)	Junction Arrivals (Veh)	Circulating flow (Veh/hr)	Capacity (Veh/hr)	RFC	Throughput (Veh/hr)	Throughput (exit side) (Veh/hr)	Start queue (Veh)	End queue (Veh)	Delay (s)	Unsignalised level of service
A - Coddimor Ln	119	30	1458	395	0.302	120	104	0.7	0.4	13.173	B
B - A421 (East)	1022	256	97	1553	0.658	1031	1481	4.0	2.0	6.996	A
C - Whaddon Rd	300	75	894	543	0.552	480	234	46.5	1.4	135.475	F
D - A421 (West)	990	247	424	1273	0.778	1137	950	40.6	3.9	45.578	E

2033 Base + CD + SP (ST), PM

Data Errors and Warnings

No errors or warnings

Junction Network

Junctions

Junction	Name	Junction type	Use circulating lanes	Arm order	Junction Delay (s)	Junction LOS
J7	Whaddon Crossroads	Standard Roundabout		A, B, C, D	104.13	F

Junction Network Options

Driving side	Lighting
Left	Normal/unknown

Traffic Demand

Demand Set Details

ID	Scenario name	Time Period name	Traffic profile type	Start time (HH:mm)	Finish time (HH:mm)	Time segment length (min)	Run automatically
D22	2033 Base + CD + SP (ST)	PM	ONE HOUR	16:45	18:15	15	✓

Vehicle mix varies over turn	Vehicle mix varies over entry	Vehicle mix source	PCU Factor for a HV (PCU)
✓	✓	HV Percentages	2.00

Demand overview (Traffic)

Arm	Linked arm	Profile type	Use O-D data	Average Demand (Veh/hr)	Scaling Factor (%)
A - Coddimor Ln		ONE HOUR	✓	171	100.000
B - A421 (East)		ONE HOUR	✓	1441	100.000
C - Whaddon Rd		ONE HOUR	✓	322	100.000
D - A421 (West)		ONE HOUR	✓	1272	100.000

Origin-Destination Data

Demand (Veh/hr)

		To			
		A - Coddimor Ln	B - A421 (East)	C - Whaddon Rd	D - A421 (West)
From	A - Coddimor Ln	0	32	53	85
	B - A421 (East)	24	1	202	1213
	C - Whaddon Rd	51	235	0	36
	D - A421 (West)	31	1209	32	0

Proportions

		To			
		A - Coddimor Ln	B - A421 (East)	C - Whaddon Rd	D - A421 (West)
From	A - Coddimor Ln	0.00	0.19	0.31	0.50
	B - A421 (East)	0.02	0.00	0.14	0.84
	C - Whaddon Rd	0.16	0.73	0.00	0.11
	D - A421 (West)	0.02	0.95	0.03	0.00

Vehicle Mix

Heavy Vehicle Percentages

		To			
		A - Coddimor Ln	B - A421 (East)	C - Whaddon Rd	D - A421 (West)
From	A - Coddimor Ln	0	0	0	0
	B - A421 (East)	5	0	1	2
	C - Whaddon Rd	0	0	0	0
	D - A421 (West)	0	3	4	0

Average PCU Per Veh

		To			
		A - Coddimor Ln	B - A421 (East)	C - Whaddon Rd	D - A421 (West)
From	A - Coddimor Ln	1.000	1.000	1.000	1.000
	B - A421 (East)	1.048	1.000	1.012	1.019
	C - Whaddon Rd	1.000	1.000	1.000	1.000
	D - A421 (West)	1.000	1.029	1.036	1.000

Detailed Demand Data

Demand for each time segment

Time Segment	Arm	Demand (Veh/hr)	Demand in PCU (PCU/hr)
16:45-17:00	A - Coddimor Ln	129	129
	B - A421 (East)	1085	1105
	C - Whaddon Rd	242	242
	D - A421 (West)	958	985
17:00-17:15	A - Coddimor Ln	154	154
	B - A421 (East)	1295	1320
	C - Whaddon Rd	289	289
	D - A421 (West)	1144	1176
17:15-17:30	A - Coddimor Ln	188	188
	B - A421 (East)	1586	1616
	C - Whaddon Rd	354	354
	D - A421 (West)	1401	1441
17:30-17:45	A - Coddimor Ln	188	188
	B - A421 (East)	1586	1616
	C - Whaddon Rd	354	354
	D - A421 (West)	1401	1441
17:45-18:00	A - Coddimor Ln	154	154
	B - A421 (East)	1295	1320
	C - Whaddon Rd	289	289
	D - A421 (West)	1144	1176
18:00-18:15	A - Coddimor Ln	129	129
	B - A421 (East)	1085	1105
	C - Whaddon Rd	242	242
	D - A421 (West)	958	985

Results

Results Summary for whole modelled period

Arm	Max RFC	Max Delay (s)	Max Queue (Veh)	Max LOS	Average Demand (Veh/hr)	Total Junction Arrivals (Veh)
A - Coddimor Ln	0.51	19.84	1.0	C	157	235
B - A421 (East)	1.02	82.28	38.0	F	1322	1983
C - Whaddon Rd	1.24	350.62	36.0	F	295	443
D - A421 (West)	1.01	79.03	31.4	F	1167	1751

Main Results for each time segment

16:45 - 17:00

Arm	Total Demand (Veh/hr)	Junction Arrivals (Veh)	Circulating flow (Veh/hr)	Capacity (Veh/hr)	RFC	Throughput (Veh/hr)	Throughput (exit side) (Veh/hr)	Start queue (Veh)	End queue (Veh)	Delay (s)	Unsignalised level of service
A - Coddimor Ln	129	32	1102	601	0.214	128	79	0.0	0.3	7.593	A
B - A421 (East)	1085	271	127	1585	0.684	1076	1102	0.0	2.1	6.968	A
C - Whaddon Rd	242	61	989	527	0.460	239	215	0.0	0.8	12.366	B
D - A421 (West)	958	239	231	1411	0.679	949	997	0.0	2.1	7.670	A

17:00 - 17:15

Arm	Total Demand (Veh/hr)	Junction Arrivals (Veh)	Circulating flow (Veh/hr)	Capacity (Veh/hr)	RFC	Throughput (Veh/hr)	Throughput (exit side) (Veh/hr)	Start queue (Veh)	End queue (Veh)	Delay (s)	Unsignalised level of service
A - Coddimor Ln	154	38	1315	487	0.315	153	94	0.3	0.5	10.752	B
B - A421 (East)	1295	324	153	1571	0.825	1286	1316	2.1	4.4	12.265	B
C - Whaddon Rd	289	72	1182	417	0.694	284	257	0.8	2.1	26.262	D
D - A421 (West)	1144	286	275	1386	0.825	1134	1191	2.1	4.4	13.828	B

17:15 - 17:30

Arm	Total Demand (Veh/hr)	Junction Arrivals (Veh)	Circulating flow (Veh/hr)	Capacity (Veh/hr)	RFC	Throughput (Veh/hr)	Throughput (exit side) (Veh/hr)	Start queue (Veh)	End queue (Veh)	Delay (s)	Unsignalised level of service
A - Coddimor Ln	188	47	1512	382	0.492	186	104	0.5	0.9	18.200	C
B - A421 (East)	1586	397	185	1553	1.021	1505	1513	4.4	24.7	45.197	E
C - Whaddon Rd	354	89	1387	300	1.182	289	303	2.1	18.4	155.071	F
D - A421 (West)	1401	350	283	1381	1.014	1332	1392	4.4	21.5	45.857	E

17:30 - 17:45

Arm	Total Demand (Veh/hr)	Junction Arrivals (Veh)	Circulating flow (Veh/hr)	Capacity (Veh/hr)	RFC	Throughput (Veh/hr)	Throughput (exit side) (Veh/hr)	Start queue (Veh)	End queue (Veh)	Delay (s)	Unsignalised level of service
A - Coddimor Ln	188	47	1537	369	0.510	188	104	0.9	1.0	19.836	C
B - A421 (East)	1586	397	187	1552	1.022	1533	1538	24.7	38.0	82.277	F
C - Whaddon Rd	354	89	1412	285	1.241	284	308	18.4	36.0	350.624	F
D - A421 (West)	1401	350	279	1383	1.012	1361	1417	21.5	31.4	79.032	F

17:45 - 18:00

Arm	Total Demand (Veh/hr)	Junction Arrivals (Veh)	Circulating flow (Veh/hr)	Capacity (Veh/hr)	RFC	Throughput (Veh/hr)	Throughput (exit side) (Veh/hr)	Start queue (Veh)	End queue (Veh)	Delay (s)	Unsignalised level of service
A - Coddimor Ln	154	38	1462	409	0.375	155	108	1.0	0.6	14.253	B
B - A421 (East)	1295	324	157	1568	0.826	1426	1460	38.0	5.4	38.165	E
C - Whaddon Rd	289	72	1303	348	0.832	338	280	36.0	23.8	308.633	F
D - A421 (West)	1144	286	326	1357	0.843	1244	1316	31.4	6.2	42.890	E

18:00 - 18:15

Arm	Total Demand (Veh/hr)	Junction Arrivals (Veh)	Circulating flow (Veh/hr)	Capacity (Veh/hr)	RFC	Throughput (Veh/hr)	Throughput (exit side) (Veh/hr)	Start queue (Veh)	End queue (Veh)	Delay (s)	Unsignalised level of service
A - Coddimor Ln	129	32	1194	552	0.233	130	95	0.6	0.3	8.545	A
B - A421 (East)	1085	271	130	1584	0.685	1097	1194	5.4	2.2	7.585	A
C - Whaddon Rd	242	61	1008	516	0.470	334	219	23.8	0.9	32.101	D
D - A421 (West)	958	239	316	1363	0.703	973	1026	6.2	2.4	9.572	A